Penn MACHINE

Since 1931

Quality • Service • Partnership

PRODUCT CATALOG

WWW.PENNUSA.COM

Revision Date: 1/24/22

Quality • Service • Partnership

Mission Statement

It is the policy of Pennsylvania Machine Works to consistently improve customer satisfaction; and earn a reputation for providing world class quality products and services, produced and delivered in a safe, timely, and efficient manner.

Since the first Penn Forged Pipe Fitting was produced in 1931, the global piping industry has undergone dynamic growth. New materials, more severe operating environments, and entirely new concepts in process design have required increasing flexibility on the part of piping component manufacturers.

At the same time, quality and value added services have become a manufacturer's hallmark. The petrochemical, power generation, nuclear, cryogenic, shipbuilding, paper mill, and related industries have demanded continuously improved standards of excellence as well as partnering opportunities to expand their core systems to better serve their customers.

The focus of Penn Machine has been to continuously improve in meeting the needs of our most demanding customers. In pursuing our improvement goals, all of Penn Machine's forged stainless steel products are electropolished. Electropolishing removes the free iron from the product's surface and exposes the more corrosion resistant layer of Chromium, allowing the product to withstand some of the most corrosive environments. All stainless steel and alloy steel products are 100 percent Positive Material Identified (PMI) to assure that our end users receive the correct material grade 100 percent of the time. This inspection is supplied as part of our standard process to prevent a catastrophic accident in the field.

Penn Machine believes that value added services are needed to improve cost reduction activities in our supply chain. We offer product training, NAFTA forms, Canadian CRN numbers, facility directions, online order tracking, and manufacturer's test reports directly on our website at www.pennusa.com.

Penn Machine's custom labeling of boxed quantity products enables customers to ship our products from their inventory with their own name, logo, and address. We can even provide labels with the customer's part number and UPC bar code to help scan and inventory products faster, thus reducing our customer's receiving process costs.

We guarantee that Penn Forged Pipe Fittings will be the industry benchmark. The complete line of Penn Forged carbon, stainless, alloy, and nonferrous pipe fittings described in this catalog are manufactured for those piping applications where quality cannot be compromised. We invite your most demanding specifications and look forward to supplying you a world class quality product with value added features that stay with our product long after it is shipped from any of our facilities.

Table of Contents

Elbows

Socket Weld 90° Elbow.... 4
Socket Weld 45° Elbow.... 5
Socket Weld Street Elbow.... 6
Threaded 90° Elbow.... 7
Threaded 45° Elbow.... 8
Threaded Street Elbow.... 9
Leg 90° Elbow.... 10

Tees

Socket Weld Tee.... 11
Threaded Tee.... 12
Butt Weld Tee.... 13
Cushion Tee.... 14

Crosses

Socket Weld Cross.... 15
Threaded Cross.... 16

Laterals

Socket Weld Lateral.... 17
Threaded Lateral.... 18

Couplings

Socket Weld Coupling.... 19
Threaded Coupling.... 20
Socket Weld x Threaded Coupling.... 21
Blind Coupling.... 22
Slip Coupling.... 23

Half Couplings

Socket Weld Half Coupling.... 24
Threaded Half Coupling.... 25

Reducers

Socket Weld Reducer.... 26
Threaded Reducer.... 27
Socket Weld x Threaded Reducer.... 28
Threaded x Socket Weld Reducer.... 29
Butt Weld Reducer.... 30
Socket Weld Eccentric Reducer.... 31
Threaded Eccentric Reducer.... 32
Butt Weld Eccentric Reducer.... 33

Caps

Socket Weld Cap.... 34
Threaded Cap.... 35
Butt Weld Cap.... 36

Plugs

Socket Weld Plug.... 37
Round Head Plug.... 38
Bull Plug.... 39
Square Head Plug.... 40
Countersunk Head Plug.... 41
Hexagon Head Plug.... 42
Radiographic Plug and Boss.... 43

Bushings

Hexagon Head Bushing.... 44
Flush Bushing.... 45

Unions

Socket Weld Union.... 46
Threaded Union.... 47
Butt Weld Union.... 48
Male x Female Threaded Union.... 49
Threaded Union 90° Elbow.... 50
Male x Female Union 90° Elbow.... 51
Male x Female Union Tee.... 52
Threaded Union Tee.... 53
Socket Weld O-Ring Union.... 54
Threaded O-Ring Union.... 55
Socket Weld Orifice Union.... 56
Threaded Orifice Union.... 57
Socket Weld Di - Electric Union.... 58
Threaded Di - Electric Union.... 59
Socket Weld Lug Nut Union.... 60

Nipples

Pipe Nipple.... 61
Hex Nipple.... 62
Concentric Swage Nipple.... 63
Eccentric Swage Nipple.... 64

Bosses

Socket Weld Boss.... 65
Threaded Boss.... 66
Combination Boss.... 67

Couplets

Socket Weld Couplet.... 68
Threaded Couplet.... 69
Combination Couplet.... 70

Inserts

Socket Weld Reducing Insert.... 71

Stub Ends

Stub End.... 73

Flanges

Exotic Alloy Flange.... 74

Outlets

Socket Weld Outlet.... 75
Threaded Outlet.... 76
Butt Weld Outlet.... 77
Elbow Outlet.... 78
Lateral Outlet.... 79
Nipple Outlet.... 80
Braze On Outlet.... 81
Insert Outlet.... 82
Sweep Outlet.... 83
Flanged Nipple Outlet.... 84

Run Consolidations for Outlets.... 85

Terms and Conditions of Sale.... 87

ISO 9001 & PED Certified
Canadian Registered in all provinces

Socket Weld 90° Elbow

Specification: ASME B16.11

Material: Available in a complete range of Carbon Steels, Stainless Steels, Alloy Steels and Non-ferrous metals certified to ASTM, ASME, and Military standards.

Sizes: 1/8”- 4” in Class 3000 & 6000 • 1/8”- 3-1/2” in Class 9000
Also available in CL 10,000 and reducing pipe sizes and tube sizes

Socket Weld Pressure Class	Pipe Schedule
Class 3000	S80/XH
Class 6000	S160
Class 9000	XXH

Welding Gap and Minimum Flat Dimension For Socket Weld Fittings

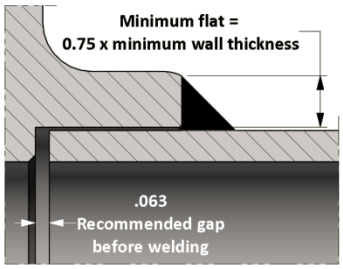

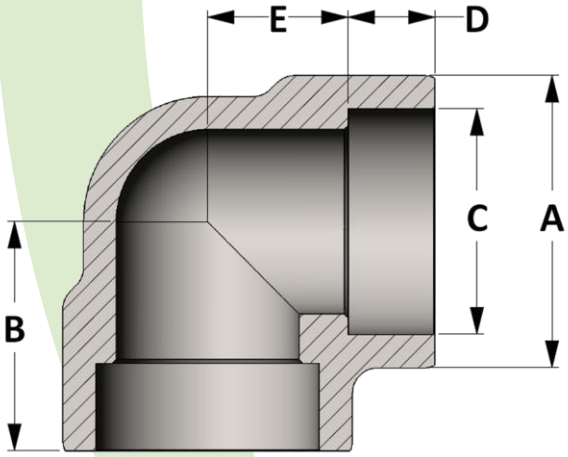

Active 3D Model

All dimensions are in inches • Weights are based on Carbon Steel

CLASS 3000 – Figure No. 13001												
PIPE SIZE	1/8	1/4	3/8	1/2	3/4	1	1-1/4	1-1/2	2	2-1/2	3	4
A	0.875	0.875	1.063	1.313	1.500	1.813	2.188	2.500	3.000	3.625	4.313	5.875
B	0.875	0.875	0.969	1.125	1.313	1.500	1.750	2.000	2.375	3.000	3.375	4.188
C	0.426	0.560	0.693	0.859	1.071	1.335	1.682	1.922	2.410	2.910	3.536	4.545
D	0.438	0.438	0.438	0.500	0.563	0.625	0.688	0.750	0.875	1.375	1.125	1.566
E	0.438	0.438	0.531	0.625	0.750	0.875	1.063	1.250	1.500	1.625	2.250	2.625
LBS	0.20	0.17	0.24	0.48	0.68	1.06	1.72	2.33	3.88	7.34	10.40	22.47

CLASS 6000 – Figure No. 16001												
PIPE SIZE	1/8	1/4	3/8	1/2	3/4	1	1-1/4	1-1/2	2	2-1/2	3	4
A	0.875	1.063	1.313	1.500	1.813	2.188	2.500	3.000	3.313	4.000	4.750	5.875
B	0.875	0.969	1.125	1.313	1.500	1.750	2.000	2.375	2.500	3.250	3.750	4.188
C	0.426	0.560	0.693	0.859	1.071	1.335	1.682	1.922	2.410	2.910	3.536	4.545
D	0.438	0.438	0.500	0.563	0.625	0.688	0.750	0.875	0.875	1.000	1.250	1.563
E	0.438	0.531	0.625	0.750	0.875	1.063	1.250	1.500	1.625	2.250	2.500	2.625
LBS	0.37	0.32	0.60	0.92	1.52	2.42	3.18	6.23	7.27	12.06	21.16	27.21

CLASS 9000 – Figure No. 19001												
PIPE SIZE	1/8	1/4	3/8	1/2	3/4	1	1-1/4	1-1/2	2	2-1/2	3	4
A	1.063	1.313	1.500	1.813	2.188	2.500	3.000	3.313	3.625	4.313	5.875	---
B	0.969	1.125	1.313	1.500	1.750	2.000	2.375	2.500	3.000	3.375	4.188	---
C	0.426	0.560	0.693	0.859	1.071	1.335	1.682	1.922	2.410	2.910	3.536	---
D	0.438	0.500	0.500	0.500	0.625	0.750	1.000	1.000	0.875	1.000	1.313	---
E	0.531	0.625	0.813	1.000	1.125	1.250	1.375	1.500	2.125	2.375	2.875	---
LBS	0.41	0.70	1.12	1.73	2.91	4.15	6.79	8.96	12.39	19.78	42.20	---

ISO 9001 & PED Certified
Canadian Registered in all provinces

Socket Weld 45° Elbow

Specification: ASME B16.11

Material: Available in a complete range of Carbon Steels, Stainless Steels, Alloy Steels and Non-ferrous metals certified to ASTM, ASME, and Military standards.

Sizes: 1/8”- 4” in Class 3000 & 6000 • 1/8”- 3-1/2” in Class 9000
Also available in CL 10,000 and in reducing pipe sizes and tube sizes

Socket Weld Pressure Class	Pipe Schedule
Class 3000	S80/XH
Class 6000	S160
Class 9000	XXH

Welding Gap and Minimum Flat Dimension For Socket Weld Fittings

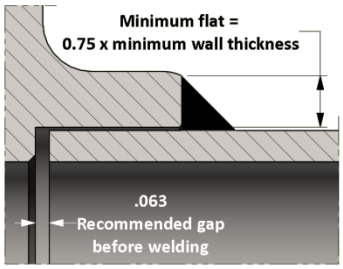

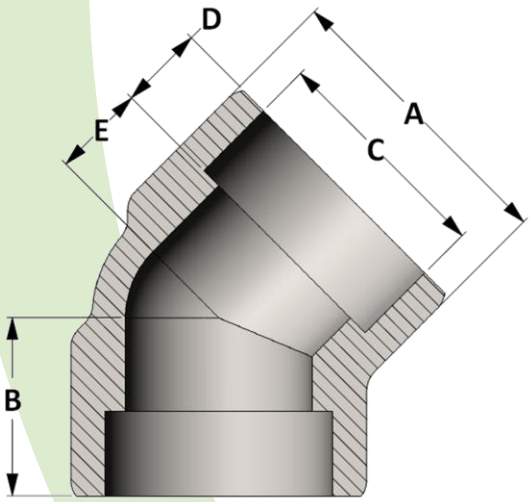

Active 3D Model

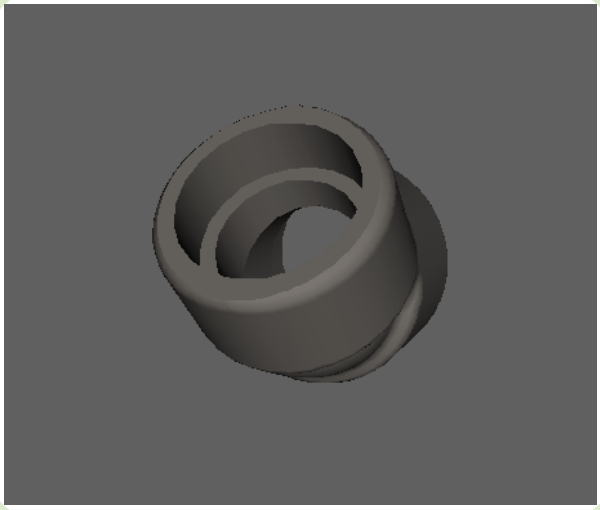

All dimensions are in inches • Weights are based on Carbon Steel

CLASS 3000 – Figure No. 13003												
PIPE SIZE	1/8	1/4	3/8	1/2	3/4	1	1-1/4	1-1/2	2	2-1/2	3	4
A	1.063	1.063	1.063	1.313	1.500	1.813	2.188	2.500	3.000	4.000	4.750	5.875
B	0.750	0.750	0.750	0.875	1.000	1.125	1.313	1.375	1.688	2.063	2.500	3.125
C	0.426	0.560	0.693	0.859	1.071	1.335	1.682	1.922	2.410	2.910	3.536	4.545
D	0.438	0.438	0.438	0.438	0.500	0.563	0.625	0.563	0.688	0.938	1.250	1.500
E	0.313	0.313	0.313	0.438	0.500	0.563	0.688	0.813	1.000	1.125	1.250	1.625
LBS	0.26	0.24	0.18	0.40	0.55	0.89	1.23	1.76	3.02	7.62	12.49	19.34

CLASS 6000 – Figure No. 16003												
PIPE SIZE	1/8	1/4	3/8	1/2	3/4	1	1-1/4	1-1/2	2	2-1/2	3	4
A	1.063	1.063	1.313	1.500	1.813	2.188	2.500	3.000	3.313	4.000	4.750	5.875
B	0.750	0.750	0.875	1.000	1.125	1.313	1.375	1.688	1.781	2.063	2.500	3.125
C	0.426	0.560	0.693	0.859	1.071	1.335	1.682	1.922	2.410	2.910	3.536	4.545
D	0.438	0.438	0.438	0.500	0.563	0.625	0.563	0.688	0.656	0.813	1.125	1.500
E	0.313	0.313	0.438	0.500	0.563	0.688	0.813	1.000	1.125	1.250	1.375	1.625
LBS	0.25	0.24	0.48	0.74	1.25	2.03	2.17	4.60	5.11	8.37	12.02	21.76

CLASS 9000 – Figure No. 19003												
PIPE SIZE	1/8	1/4	3/8	1/2	3/4	1	1-1/4	1-1/2	2	2-1/2	3	4
A	1.063	1.313	1.500	1.813	2.188	2.500	3.000	3.313	4.000	4.750	5.875	---
B	0.750	0.875	1.000	1.125	1.313	1.375	1.688	1.781	2.063	2.500	3.125	---
C	0.426	0.560	0.693	0.859	1.071	1.335	1.682	1.922	2.410	2.910	3.536	---
D	0.438	0.500	0.500	0.500	0.563	0.563	0.813	0.781	0.938	1.000	1.250	---
E	0.313	0.375	0.563	0.625	0.750	0.813	0.875	1.000	1.125	1.500	1.875	---
LBS	0.33	0.56	0.85	1.41	2.28	3.04	5.23	6.51	10.44	18.75	32.85	---

ISO 9001 & PED Certified
Canadian Registered in all provinces

Socket Weld Street Elbow

Specification: Socket Weld ends per ASME B16.11

Material: Available in a complete range of Carbon Steels, Stainless Steels, Alloy Steels and Non-ferrous metals certified to ASTM, ASME, and Military standards.

Sizes: 1/8”- 2” in Class 3000 • 1/8”- 1-1/2” in Class 6000
Also available and reducing pipe sizes and tube sizes

Socket Weld Pressure Class	Pipe Schedule
Class 3000	S80/XH
Class 6000	S160

Welding Gap and Minimum Flat Dimension For Socket Weld Fittings

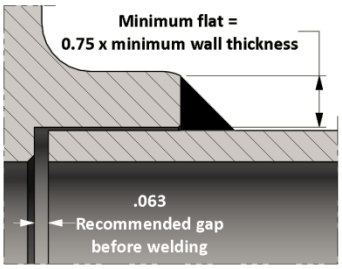

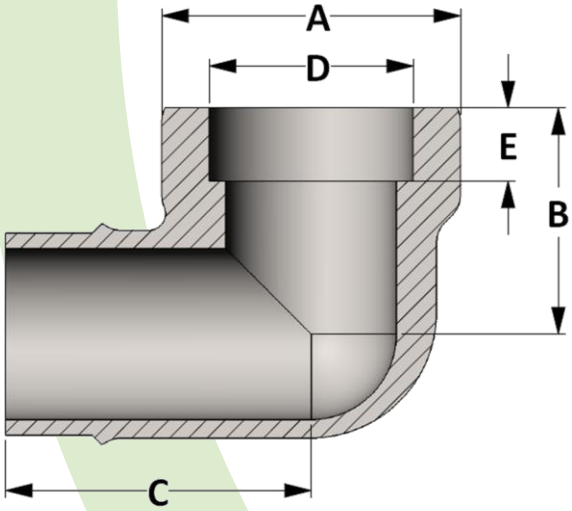

Active 3D Model

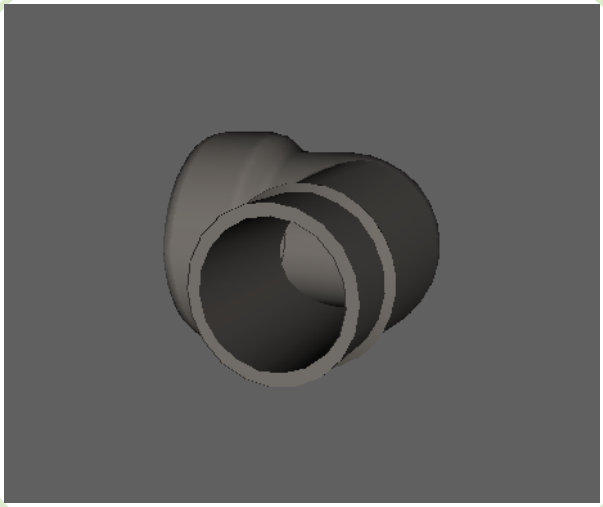

All dimensions are in inches • Weights are based on Carbon Steel

CLASS 3000 – Figure No. 13005									
PIPE SIZE	1/8	1/4	3/8	1/2	3/4	1	1-1/4	1-1/2	2
A	1.000	1.000	1.313	1.500	1.750	2.000	2.438	2.750	3.313
B	0.875	0.875	1.125	1.250	1.375	1.750	2.000	2.125	2.500
C	1.250	1.250	1.500	1.688	1.875	2.250	2.625	2.875	3.313
D	0.426	0.560	0.693	0.859	1.071	1.335	1.682	1.922	2.410
E	0.438	0.438	0.438	0.500	0.563	0.625	0.688	0.750	0.875
LBS	0.21	0.19	0.39	0.55	0.85	1.40	2.05	2.55	4.30

CLASS 6000 – Figure No. 16005									
PIPE SIZE	1/8	1/4	3/8	1/2	3/4	1	1-1/4	1-1/2	2
A	1.000	1.313	1.500	1.750	2.000	2.438	2.750	3.313	---
B	0.875	1.125	1.250	1.375	1.750	2.000	2.125	2.500	---
C	1.250	1.500	1.688	1.875	2.250	2.625	2.875	3.313	---
D	0.426	0.560	0.693	0.859	1.071	1.335	1.682	1.922	---
E	0.438	0.438	0.500	0.563	0.625	0.688	0.750	0.875	---
LBS	0.23	0.45	0.67	1.02	1.80	2.90	3.55	6.57	

ISO 9001 & PED Certified
Canadian Registered in all provinces

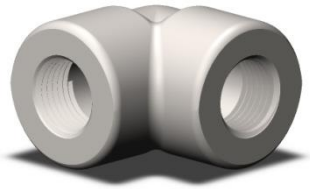

Threaded 90° Elbow

Specification: ASME B16.11

Material: Available in a complete range of Carbon Steels, Stainless Steels, Alloy Steels and Non-ferrous metals certified to ASTM, ASME, and Military standards.

Sizes: 1/8”- 4” in CL 2000 and CL 3000 • 1/8”- 3-1/2” in CL 6000
Also available in CL 9000 and CL 10,000 and in reducing pipe sizes

Threads: American National Standard Taper Pipe Threads NPT (ANSI/ASME B1.20.1-1983)
Also available in other thread forms: NPTF, NPSC, NPSM, NGT, SAE, BSPT, BSPP and in any combination.
Left hand threads available upon request.

Threaded Pressure Class	Pipe Schedule
Class 2000	S80/XH
Class 3000	S160
Class 6000	XXH

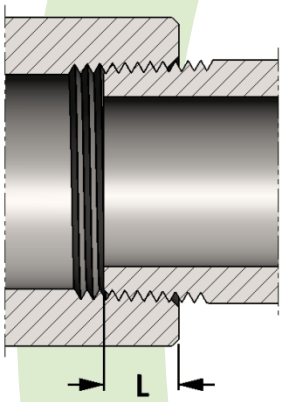

SIZE	L
1/8	0.273
1/4	0.395
3/8	0.407
1/2	0.534
3/4	0.553
1	0.661
1-1/4	0.681
1-1/2	0.681

SIZE	L
2	0.697
2-1/2	0.933
3	1.016
3-1/2	1.071
4	1.094
5	1.187
6	1.208
8	1.313

Length of thread screwed into fitting

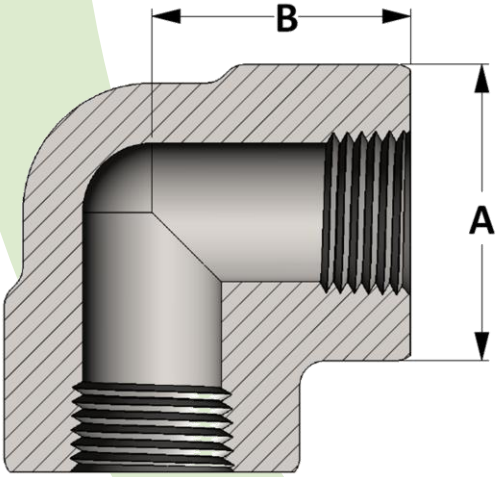

Active 3D Model

All dimensions are in inches • Weights are based on Carbon Steel

PIPE SIZE	CLASS 2000 – Figure No. 02001												
	1/8	1/4	3/8	1/2	3/4	1	1-1/4	1-1/2	2	2-1/2	3	3-1/2	4
A	0.875	0.875	1.063	1.313	1.500	1.813	2.188	2.500	3.000	3.625	4.313	---	5.875
B	0.875	0.875	0.969	1.125	1.313	1.500	1.750	2.000	2.375	3.000	3.375	---	4.188
LBS	0.20	0.18	0.25	0.51	0.73	1.07	1.63	2.31	3.61	7.60	11.93	---	24.05

PIPE SIZE	CLASS 3000 – Figure No. 03001												
	1/8	1/4	3/8	1/2	3/4	1	1-1/4	1-1/2	2	2-1/2	3	3-1/2	4
A	0.875	1.063	1.313	1.500	1.813	2.188	2.500	3.000	3.313	4.000	4.750	5.875	5.875
B	0.875	0.969	1.125	1.313	1.500	1.750	2.000	2.375	2.500	3.250	3.750	4.188	4.188
LBS	0.20	0.33	0.61	0.92	1.47	2.33	2.98	5.72	6.53	11.03	18.83	29.37	24.05

PIPE SIZE	CLASS 6000 – Figure No. 06001												
	1/8	1/4	3/8	1/2	3/4	1	1-1/4	1-1/2	2	2-1/2	3	3-1/2	4
A	1.063	1.313	1.500	1.813	2.188	2.500	3.000	3.313	4.000	4.750	5.875	5.875	---
B	0.969	1.125	1.313	1.500	1.750	2.000	2.375	2.500	3.250	3.750	4.188	4.188	---
LBS	0.35	0.65	1.79	3.18	2.75	7.42	6.45	16.80	19.08	24.90	37.70	31.10	---

ISO 9001 & PED Certified
Canadian Registered in all provinces

Threaded 45° Elbow

Specification: ASME B16.11

Material: Available in a complete range of Carbon Steels, Stainless Steels, Alloy Steels and Non-ferrous metals certified to ASTM, ASME, and Military standards.

Sizes: 1/8”- 4” in CL 2000 and CL 3000 • 1/8”- 3-1/2” in CL 6000
Also available in CL 9000 and CL 10,000 and in reducing pipe sizes

Threads: American National Standard Taper Pipe Threads NPT (ANSI/ASME B1.20.1-1983)
Also available in other thread forms: NPTF, NPSC, NPSM, NGT, SAE, BSPT, BSPP and in any combination.
Left hand threads available upon request.

Threaded Pressure Class	Pipe Schedule
Class 2000	S80/XH
Class 3000	S160
Class 6000	XXH

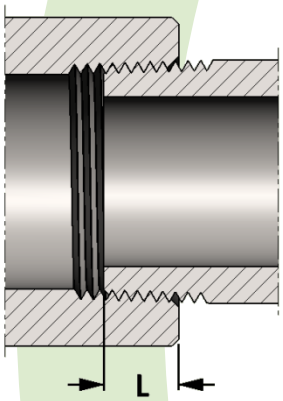

SIZE	L
1/8	0.273
1/4	0.395
3/8	0.407
1/2	0.534
3/4	0.553
1	0.661
1-1/4	0.681
1-1/2	0.681

SIZE	L
2	0.697
2-1/2	0.933
3	1.016
3-1/2	1.071
4	1.094
5	1.187
6	1.208
8	1.313

Length of thread screwed into fitting

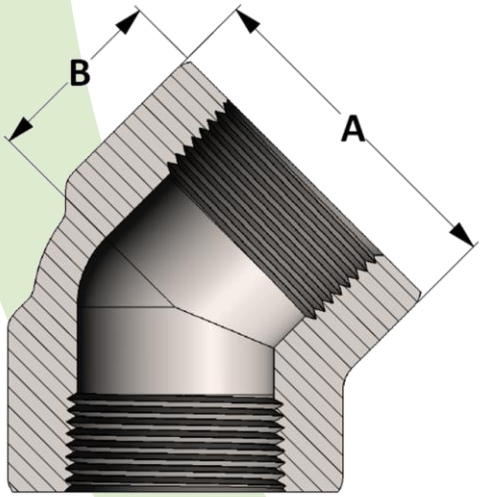

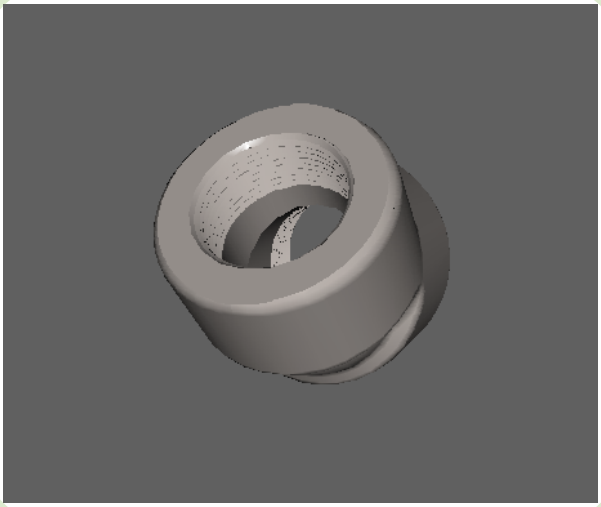

Active 3D Model

All dimensions are in inches • Weights are based on Carbon Steel

PIPE SIZE	CLASS 2000 – Figure No. 02003												
	1/8	1/4	3/8	1/2	3/4	1	1-1/4	1-1/2	2	2-1/2	3	3-1/2	4
A	1.063	1.063	1.063	1.313	1.500	1.813	2.188	2.500	3.000	4.000	4.750	---	5.875
B	0.750	0.750	0.750	0.875	1.000	1.125	1.313	1.375	1.688	2.063	2.500	---	3.125
LBS	0.29	0.29	0.21	0.42	0.60	0.97	1.35	1.83	3.08	7.80	13.52	---	19.35

PIPE SIZE	CLASS 3000 – Figure No. 03003												
	1/8	1/4	3/8	1/2	3/4	1	1-1/4	1-1/2	2	2-1/2	3	3-1/2	4
A	1.063	1.063	1.313	1.500	1.813	2.188	2.500	3.000	3.313	4.000	4.750	5.875	5.875
B	0.750	0.750	0.875	1.000	1.125	1.313	1.375	1.688	1.781	2.063	2.500	3.125	3.125
LBS	0.29	0.25	0.50	0.76	1.23	1.87	2.29	4.40	4.62	7.84	13.52	24.70	19.35

PIPE SIZE	CLASS 6000 – Figure No. 06003												
	1/8	1/4	3/8	1/2	3/4	1	1-1/4	1-1/2	2	2-1/2	3	3-1/2	4
A	1.063	1.313	1.500	1.813	2.188	2.500	3.000	3.313	4.000	4.750	5.875	5.875	---
B	0.750	0.875	1.000	1.125	1.313	1.375	1.688	1.781	2.063	2.500	3.125	3.125	---
LBS	0.28	0.57	0.86	1.41	2.25	2.81	5.25	6.16	10.04	15.56	32.42	28.72	---

ISO 9001 & PED Certified
Canadian Registered in all provinces

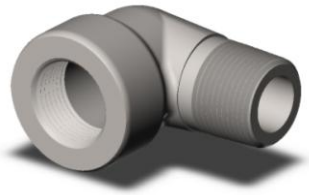

Threaded Street Elbow

Specification: ASME B16.11

Material: Available in a complete range of Carbon Steels, Stainless Steels, Alloy Steels and Non-ferrous metals certified to ASTM, ASME, and Military standards.

Sizes: 1/8”- 2” in CL 3000 • 1/8”- 1-1/2” in CL 6000
Also available in reducing pipe sizes

Threads: American National Standard Taper Pipe Threads NPT (ANSI/ASME B1.20.1-1983)
Also available in other thread forms: NPTF, NPSC, NPSM, NGT, SAE, BSPT, BSPP and in any combination.
Left hand threads available upon request.

Threaded Pressure Class	Pipe Schedule
Class 3000	S160
Class 6000	XXH

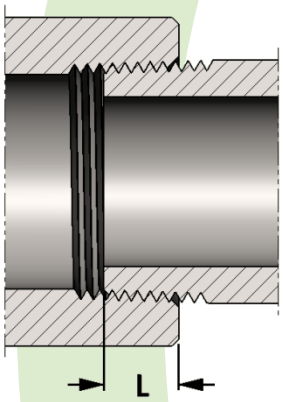

SIZE	L
1/8	0.273
1/4	0.395
3/8	0.407
1/2	0.534
3/4	0.553
1	0.661
1-1/4	0.681
1-1/2	0.681

SIZE	L
2	0.697
2-1/2	0.933
3	1.016
3-1/2	1.071
4	1.094
5	1.187
6	1.208
8	1.313

Length of thread screwed into fitting

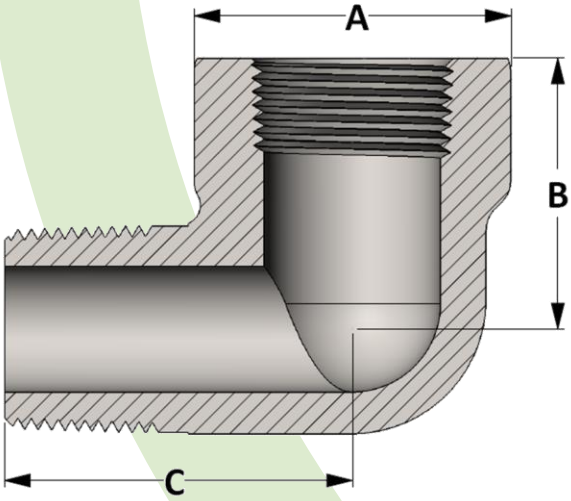

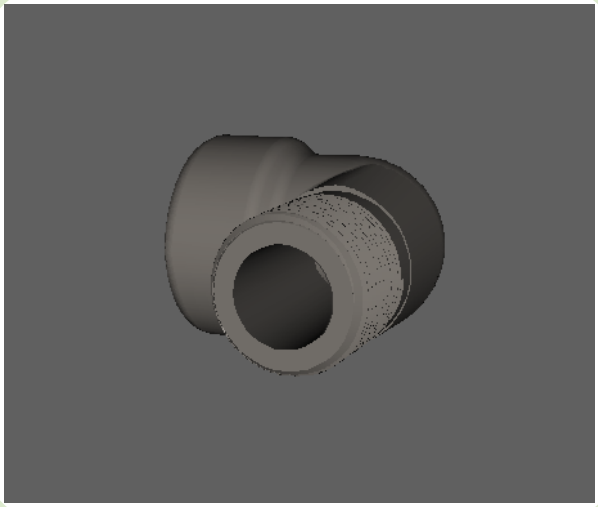

Active 3D Model

All dimensions are in inches • Weights are based on Carbon Steel

CLASS 3000 – Figure No. 03005									
PIPE SIZE	1/8	1/4	3/8	1/2	3/4	1	1-1/4	1-1/2	2
A	1.000	1.000	1.313	1.500	1.750	2.000	2.438	2.750	3.313
B	0.875	0.875	1.125	1.250	1.375	1.750	2.000	2.125	2.500
C	1.250	1.250	1.500	1.688	1.875	2.250	2.625	2.875	3.313
LBS	0.22	0.20	0.45	0.59	0.89	1.33	2.45	3.04	4.84

CLASS 6000 – Figure No. 06005									
PIPE SIZE	1/8	1/4	3/8	1/2	3/4	1	1-1/4	1-1/2	2
A	1.000	1.313	1.500	1.750	2.000	2.438	2.750	3.313	---
B	0.875	1.125	1.250	1.375	1.750	2.000	2.125	2.500	---
C	1.250	1.500	1.688	1.875	2.250	2.625	2.875	3.313	---
LBS	0.22	0.44	0.99	1.06	1.74	3.16	3.94	6.47	---

Leg 90° Elbow

ISO 9001 & PED Certified
Canadian Registered in all provinces

Material: Available in a complete range of Carbon Steels, Stainless Steels, Alloy Steels and Non-ferrous metals certified to ASTM, ASME, and Military standards.

Sizes: 1/8"- 4" in Class 3000 & 6000 • 1/8"- 3-1/2" in Class 9000
Also available in Threaded and Butt weld End Connections

Socket Weld Pressure Class	Pipe Schedule
Class 3000	S80/XH
Class 6000	S160
Class 9000	XXH

Welding Gap and Minimum Flat Dimension For Socket Weld Fittings

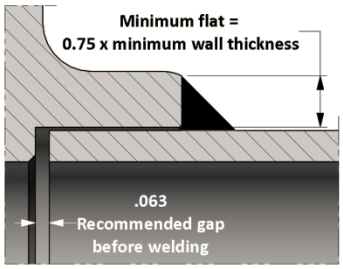

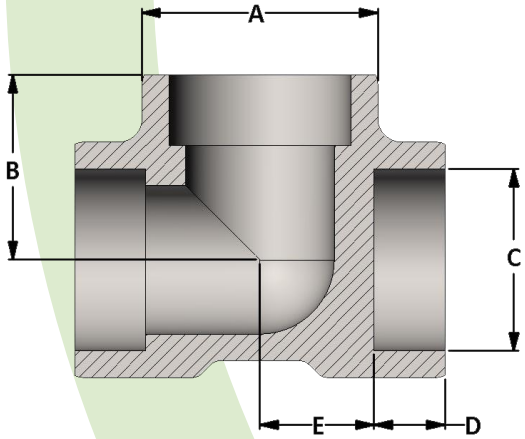

Active 3D Model

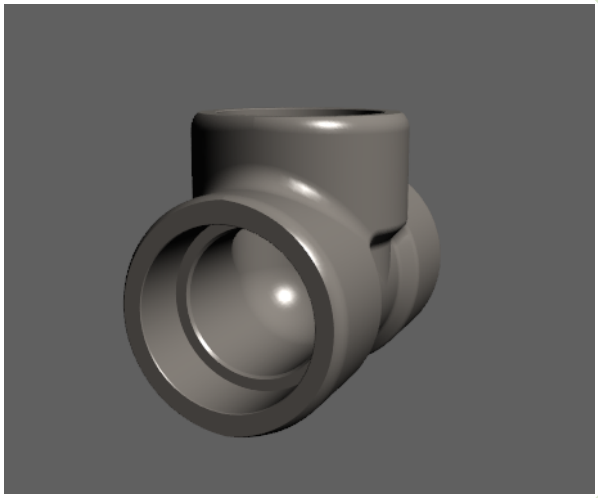

All dimensions are in inches • Weights are based on Carbon Steel

CLASS 3000 – Figure No. 13240												
PIPE SIZE	1/8	1/4	3/8	1/2	3/4	1	1-1/4	1-1/2	2	2-1/2	3	4
A	0.875	0.875	1.063	1.313	1.500	1.813	2.188	2.500	3.000	3.625	4.313	5.875
B	0.875	0.875	0.969	1.125	1.313	1.500	1.750	2.000	2.375	3.000	3.375	4.188
C	0.426	0.560	0.693	0.859	1.071	1.335	1.682	1.922	2.410	2.910	3.536	4.545
D	0.438	0.438	0.438	0.500	0.563	0.625	0.688	0.750	0.875	1.375	1.125	1.566
E	0.438	0.438	0.531	0.625	0.750	0.875	1.063	1.250	1.500	1.625	2.250	2.625
LBS	0.26	0.23	0.33	0.65	0.94	1.40	2.20	3.29	5.05	9.50	14.25	29.25

CLASS 6000 – Figure No. 16240												
PIPE SIZE	1/8	1/4	3/8	1/2	3/4	1	1-1/4	1-1/2	2	2-1/2	3	4
A	0.875	1.063	1.313	1.500	1.813	2.188	2.500	3.000	3.313	4.000	4.750	5.875
B	0.875	0.969	1.125	1.313	1.500	1.750	2.000	2.375	2.500	3.250	3.750	4.188
C	0.426	0.560	0.693	0.859	1.071	1.335	1.682	1.922	2.410	2.910	3.536	4.545
D	0.438	0.438	0.500	0.563	0.625	0.688	0.750	0.875	0.875	1.000	1.250	1.563
E	0.438	0.531	0.625	0.750	0.875	1.063	1.250	1.500	1.625	2.250	2.500	2.625
LBS	0.45	0.42	0.85	1.22	1.98	3.20	4.32	8.59	9.35	16.09	26.54	33.63

CLASS 9000 – Figure No. 19240												
PIPE SIZE	1/8	1/4	3/8	1/2	3/4	1	1-1/4	1-1/2	2	2-1/2	3	4
A	1.063	1.313	1.500	1.813	2.188	2.500	3.000	3.313	3.625	4.313	5.875	---
B	0.969	1.125	1.313	1.500	1.750	2.000	2.375	2.500	3.000	3.375	4.188	---
C	0.426	0.560	0.693	0.859	1.071	1.335	1.682	1.922	2.410	2.910	3.536	---
D	0.438	0.500	0.500	0.500	0.625	0.750	1.000	1.000	0.875	1.000	1.313	---
E	0.531	0.625	0.813	1.000	1.125	1.250	1.375	1.500	2.125	2.375	2.875	---
LBS	0.55	0.92	1.39	2.40	3.95	5.84	8.03	11.53	16.93	25.03	51.36	---

Socket Weld Tee

ISO 9001 & PED Certified
Canadian Registered in all provinces

Specification: ASME B16.11

Material: Available in a complete range of Carbon Steels, Stainless Steels, Alloy Steels and Non-ferrous metals certified to ASTM, ASME, and Military standards.

Sizes: 1/8”- 4” in Class 3000 & 6000 • 1/8”- 3-1/2” in Class 9000
Also available in CL 10,000 and in reducing pipe sizes and tube sizes

Socket Weld Pressure Class	Pipe Schedule
Class 3000	S80/XH
Class 6000	S160
Class 9000	XXH

Welding Gap and Minimum Flat Dimension For Socket Weld Fittings

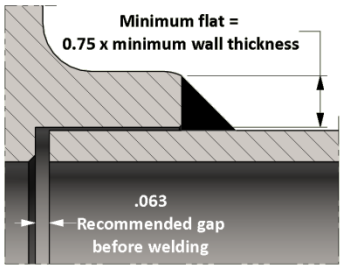

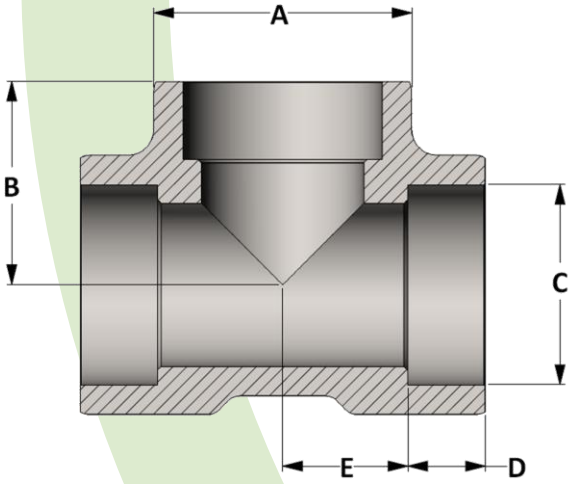

Active 3D Model

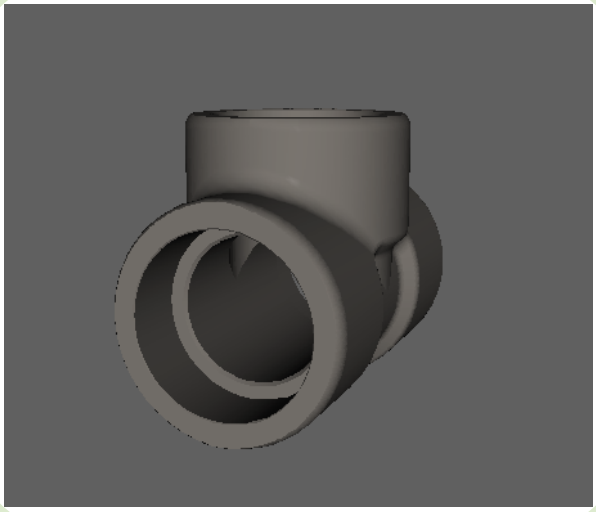

All dimensions are in inches • Weights are based on Carbon Steel

CLASS 3000 – Figure No. 13002												
PIPE SIZE	1/8	1/4	3/8	1/2	3/4	1	1-1/4	1-1/2	2	2-1/2	3	4
A	0.875	0.875	1.063	1.313	1.500	1.813	2.188	2.500	3.000	3.625	4.313	5.875
B	0.875	0.875	0.969	1.125	1.313	1.500	1.750	2.000	2.375	3.000	3.375	4.188
C	0.426	0.560	0.693	0.859	1.071	1.335	1.682	1.922	2.410	2.910	3.536	4.545
D	0.438	0.438	0.438	0.500	0.563	0.625	0.688	0.750	0.875	1.375	1.125	1.566
E	0.438	0.438	0.531	0.625	0.750	0.875	1.063	1.250	1.500	1.625	2.250	2.625
LBS	0.25	0.22	0.31	0.62	0.88	1.30	2.00	2.99	4.60	8.49	13.85	27.14

CLASS 6000 – Figure No. 16002												
PIPE SIZE	1/8	1/4	3/8	1/2	3/4	1	1-1/4	1-1/2	2	2-1/2	3	4
A	0.875	1.063	1.313	1.500	1.813	2.188	2.500	3.000	3.313	4.000	4.750	5.875
B	0.875	0.969	1.125	1.313	1.500	1.750	2.000	2.375	2.500	3.250	3.750	4.188
C	0.426	0.560	0.693	0.859	1.071	1.335	1.682	1.922	2.410	2.910	3.536	4.545
D	0.438	0.438	0.500	0.563	0.625	0.688	0.750	0.875	0.875	1.000	1.250	1.563
E	0.438	0.531	0.625	0.750	0.875	1.063	1.250	1.500	1.625	2.250	2.500	2.625
LBS	0.44	0.41	0.81	1.18	1.93	3.10	4.22	7.59	8.70	15.09	25.24	32.51

CLASS 9000 – Figure No. 19002												
PIPE SIZE	1/8	1/4	3/8	1/2	3/4	1	1-1/4	1-1/2	2	2-1/2	3	4
A	1.063	1.313	1.500	1.813	2.188	2.500	3.000	3.313	3.625	4.313	5.875	---
B	0.969	1.125	1.313	1.500	1.750	2.000	2.375	2.500	3.000	3.375	4.188	---
C	0.426	0.560	0.693	0.859	1.071	1.335	1.682	1.922	2.410	2.910	3.536	---
D	0.438	0.500	0.500	0.500	0.625	0.750	1.000	1.000	0.875	1.000	1.313	---
E	0.531	0.625	0.813	1.000	1.125	1.250	1.375	1.500	2.125	2.375	2.875	---
LBS	0.54	0.90	1.37	2.33	3.81	5.41	7.63	10.88	15.48	23.32	49.77	---

Threaded Tee

ISO 9001 & PED Certified
Canadian Registered in all provinces

Specification: ASME B16.11

Material: Available in a complete range of Carbon Steels, Stainless Steels, Alloy Steels and Non-ferrous metals certified to ASTM, ASME, and Military standards.

Sizes: 1/8”- 4” in CL 2000 and CL 3000 • 1/8”- 3-1/2” in CL 6000
Also available in CL 9000 and CL 10,000 in reducing pipe sizes

Threads: American National Standard Taper Pipe Threads NPT (ANSI/ASME B1.20.1-1983)
Also available in other thread forms: NPTF, NPSC, NPSM, NGT, SAE, BSPT, BSPP and in any combination.
Left hand threads available upon request.

Threaded Pressure Class	Pipe Schedule
Class 2000	S80/XH
Class 3000	S160
Class 6000	XXH

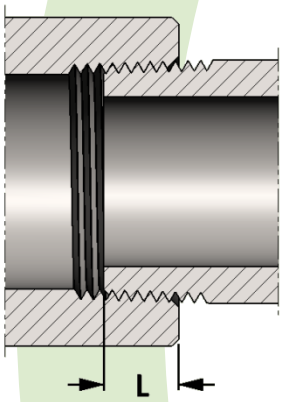

SIZE	L
1/8	0.273
1/4	0.395
3/8	0.407
1/2	0.534
3/4	0.553
1	0.661
1-1/4	0.681
1-1/2	0.681

SIZE	L
2	0.697
2-1/2	0.933
3	1.016
3-1/2	1.071
4	1.094
5	1.187
6	1.208
8	1.313

Length of thread screwed into fitting

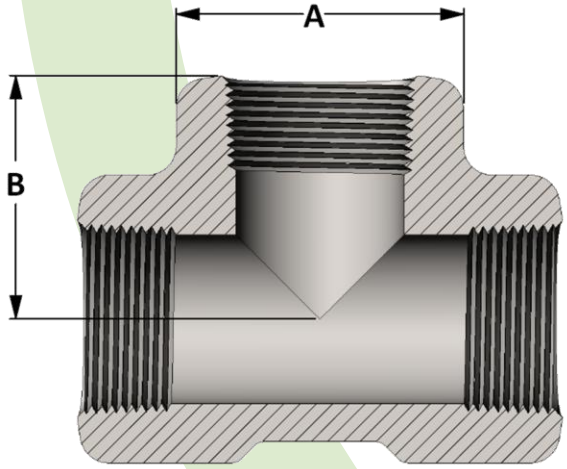

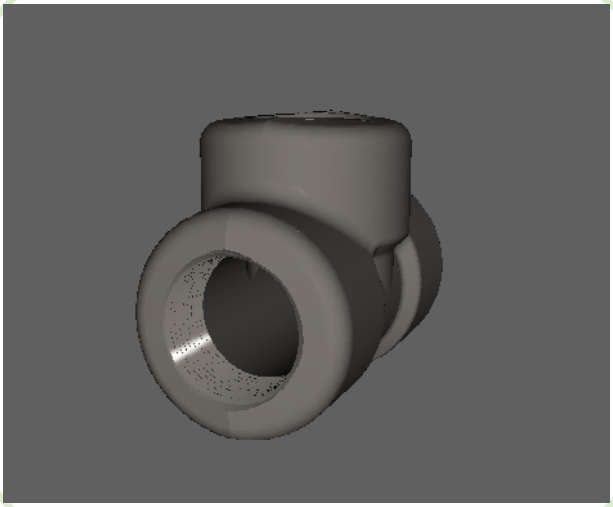

Active 3D Model

All dimensions are in inches • Weights are based on Carbon Steel

PIPE SIZE	CLASS 2000 – Figure No. 02002												
	1/8	1/4	3/8	1/2	3/4	1	1-1/4	1-1/2	2	2-1/2	3	3-1/2	4
A	0.875	0.875	1.063	1.313	1.500	1.813	2.188	2.500	3.000	3.625	4.313	---	5.875
B	0.875	0.875	0.969	1.125	1.313	1.500	1.750	2.000	2.375	3.000	3.375	---	4.188
LBS	0.31	0.24	0.37	0.67	0.91	1.38	1.96	3.10	4.98	9.31	13.32	---	28.02

PIPE SIZE	CLASS 3000 – Figure No. 03002												
	1/8	1/4	3/8	1/2	3/4	1	1-1/4	1-1/2	2	2-1/2	3	3-1/2	4
A	0.875	1.063	1.313	1.500	1.813	2.188	2.500	3.000	3.313	4.000	4.750	5.875	5.875
B	0.875	0.969	1.125	1.313	1.500	1.750	2.000	2.375	2.500	3.250	3.750	4.188	4.188
LBS	0.31	0.45	0.78	1.20	1.87	2.95	3.92	7.35	7.58	14.61	22.82	36.19	28.02

PIPE SIZE	CLASS 6000 – Figure No. 06002												
	1/8	1/4	3/8	1/2	3/4	1	1-1/4	1-1/2	2	2-1/2	3	3-1/2	4
A	1.063	1.313	1.500	1.813	2.188	2.500	3.000	3.313	4.000	4.750	5.875	5.875	---
B	0.969	1.125	1.313	1.500	1.750	2.000	2.375	2.500	3.250	3.750	4.188	4.188	---
LBS	0.44	0.91	1.36	2.21	3.57	5.11	8.25	10.46	17.54	30.65	49.80	38.23	---

Socket Weld Cross

ISO 9001 & PED Certified
Canadian Registered in all provinces

Specification: ASME B16.11

Material: Available in a complete range of Carbon Steels, Stainless Steels, Alloy Steels and Non-ferrous metals certified to ASTM, ASME, and Military standards.

Sizes: 1/8”- 4” in Class 3000 & 6000 • 1/8”- 3-1/2” in Class 9000
Also available CL 10,000 and in reducing pipe sizes and tube sizes

Socket Weld Pressure Class	Pipe Schedule
Class 3000	S80/XH
Class 6000	S160
Class 9000	XXH

Welding Gap and Minimum Flat Dimension For Socket Weld Fittings

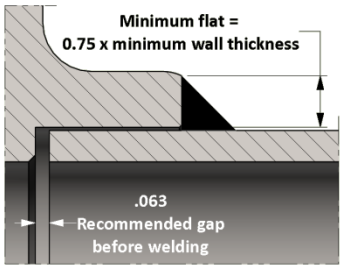

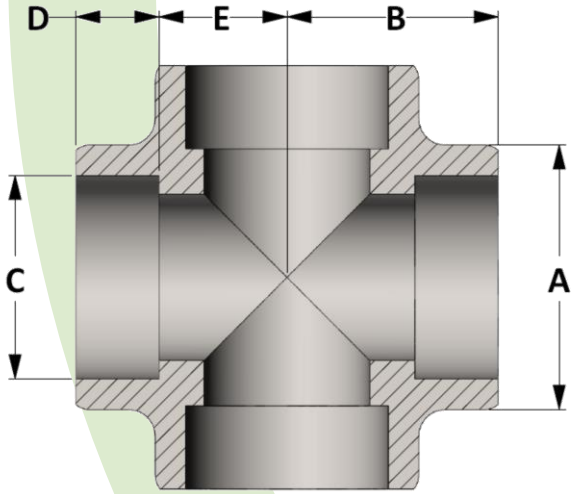

Active 3D Model

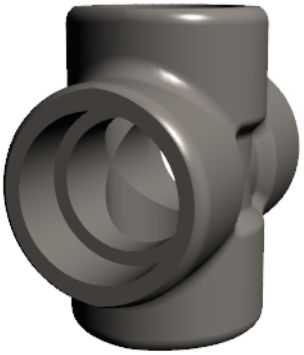

All dimensions are in inches • Weights are based on Carbon Steel

CLASS 3000 – Figure No. 13004												
PIPE SIZE	1/8	1/4	3/8	1/2	3/4	1	1-1/4	1-1/2	2	2-1/2	3	4
A	1.063	1.063	1.063	1.313	1.500	1.813	2.188	2.500	3.000	3.625	4.313	5.875
B	0.969	0.969	0.969	1.125	1.313	1.500	1.750	2.000	2.375	3.000	3.375	4.188
C	0.426	0.560	0.693	0.859	1.071	1.335	1.682	1.922	2.410	2.910	3.536	4.545
D	0.438	0.438	0.438	0.500	0.563	0.625	0.688	0.750	0.875	1.625	1.125	1.566
E	0.531	0.531	0.531	0.625	0.750	0.875	1.063	1.250	1.500	1.625	2.250	2.625
LBS	0.47	0.40	0.35	0.73	0.96	1.53	2.32	3.59	5.50	14.97	17.56	30.84

CLASS 6000 – Figure No. 16004												
PIPE SIZE	1/8	1/4	3/8	1/2	3/4	1	1-1/4	1-1/2	2	2-1/2	3	4
A	1.063	1.063	1.313	1.500	1.813	2.188	2.500	3.000	3.313	4.000	4.750	5.875
B	0.969	0.969	1.125	1.313	1.500	1.750	2.000	2.375	2.500	3.250	3.750	4.188
C	0.426	0.560	0.693	0.859	1.071	1.335	1.682	1.922	2.410	2.910	3.536	4.545
D	0.438	0.438	0.500	0.563	0.625	0.688	0.750	0.875	0.875	1.000	1.250	1.563
E	0.531	0.531	0.625	0.750	0.875	1.063	1.250	1.500	1.625	2.250	2.500	2.625
LBS	0.65	0.62	0.98	1.35	2.29	3.67	5.20	9.26	9.03	18.28	29.07	38.28

CLASS 9000 – Figure No. 19004												
PIPE SIZE	1/8	1/4	3/8	1/2	3/4	1	1-1/4	1-1/2	2	2-1/2	3	4
A	1.063	1.313	1.500	1.813	2.188	2.500	3.000	3.313	3.625	4.313	5.875	---
B	0.969	1.125	1.313	1.500	1.750	2.000	2.375	2.500	3.000	3.375	4.188	---
C	0.426	0.560	0.693	0.859	1.071	1.335	1.682	1.922	2.410	2.910	3.536	---
D	0.438	0.500	0.500	0.500	0.625	0.750	1.000	1.000	0.875	1.000	1.313	---
E	0.531	0.625	0.813	1.000	1.125	1.250	1.375	1.500	2.125	2.375	2.875	---
LBS	0.66	1.11	1.71	2.78	4.89	6.35	10.27	12.62	25.41	26.50	60.35	---

Threaded Cross

ISO 9001 & PED Certified
Canadian Registered in all provinces

Specification: ASME B16.11

Material: Available in a complete range of Carbon Steels, Stainless Steels, Alloy Steels and Non-ferrous metals certified to ASTM, ASME, and Military standards.

Sizes: 1/8”- 4” in CL 2000 and CL 3000 • 1/8”- 3-1/2” in CL 6000
Also available in CL 9000 and CL 10,000 and in reducing pipe sizes

Threads: American National Standard Taper Pipe Threads NPT (ANSI/ASME B1.20.1-1983)
Also available in other thread forms: NPTF, NPSC, NPSM, NGT, SAE, BSPT, BSPP and in any combination.
Left hand threads available upon request.

Threaded Pressure Class	Pipe Schedule
Class 2000	S80/XH
Class 3000	S160
Class 6000	XXH

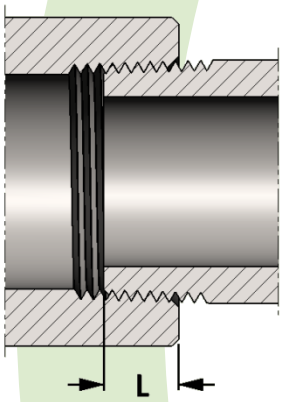

SIZE	L	SIZE	L
1/8	0.273	2	0.697
1/4	0.395	2-1/2	0.933
3/8	0.407	3	1.016
1/2	0.534	3-1/2	1.071
3/4	0.553	4	1.094
1	0.661	5	1.187
1-1/4	0.681	6	1.208
1-1/2	0.681	8	1.313

Length of thread screwed into fitting

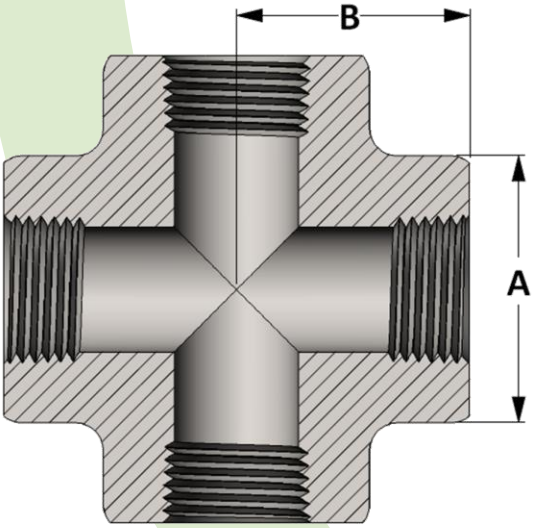

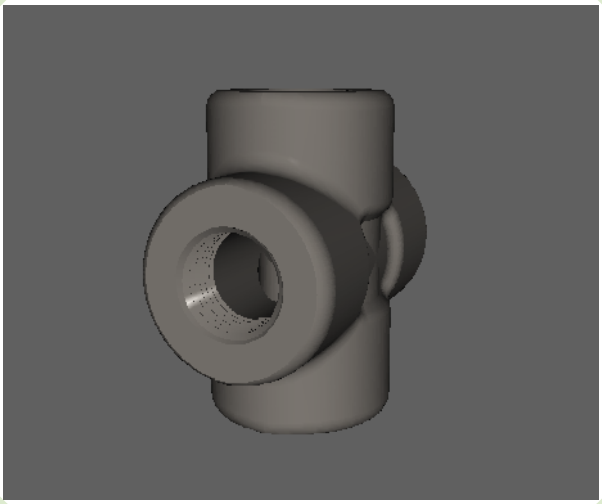

Active 3D Model

All dimensions are in inches • Weights are based on Carbon Steel

PIPE SIZE	CLASS 2000 – Figure No. 02004												
	1/8	1/4	3/8	1/2	3/4	1	1-1/4	1-1/2	2	2-1/2	3	3-1/2	4
A	1.063	1.063	1.063	1.313	1.500	1.813	2.188	2.500	3.000	3.625	4.313	---	5.875
B	0.969	0.969	0.969	1.125	1.313	1.500	1.750	2.000	2.375	3.000	3.375	---	4.188
LBS	0.54	0.52	0.40	0.84	1.20	1.67	2.48	3.41	5.51	16.66	27.90	---	33.28

PIPE SIZE	CLASS 3000 – Figure No. 03004												
	1/8	1/4	3/8	1/2	3/4	1	1-1/4	1-1/2	2	2-1/2	3	3-1/2	4
A	1.063	1.063	1.313	1.500	1.813	2.188	2.500	3.000	3.313	4.000	4.750	5.875	5.875
B	0.969	0.969	1.125	1.313	1.500	1.750	2.000	2.375	2.500	3.250	3.750	4.188	4.188
LBS	0.54	0.52	1.02	1.54	2.27	3.68	4.98	8.68	8.57	16.66	27.89	45.06	33.28

PIPE SIZE	CLASS 6000 – Figure No. 06004												
	1/8	1/4	3/8	1/2	3/4	1	1-1/4	1-1/2	2	2-1/2	3	3-1/2	4
A	1.063	1.313	1.500	1.813	2.188	2.500	3.000	3.313	4.000	4.750	5.875	5.875	---
B	0.969	1.125	1.313	1.500	1.750	2.000	2.375	2.500	3.250	3.750	4.188	4.188	---
LBS	0.54	1.14	1.71	2.67	4.38	5.92	10.15	11.65	21.71	36.85	54.83	45.06	---

Penn MACHINE Since 1931

ISO 9001 & PED Certified
Canadian Registered in all provinces

Socket Weld Lateral

Material: Available in a complete range of Carbon Steels, Stainless Steels, Alloy Steels and Non-ferrous metals certified to ASTM, ASME, and Military standards.

Sizes: 1/8”- 2-1/2” in Class 3000 & 6000 • 1/2”- 2” in Class 9000
Also available in CL 10,000 and reducing pipe sizes and tube sizes

Socket Weld Pressure Class	Pipe Schedule
Class 3000	S80/XH
Class 6000	S160
Class 9000	XXH

Welding Gap and Minimum Flat Dimension For Socket Weld Fittings

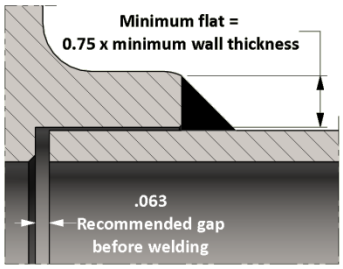

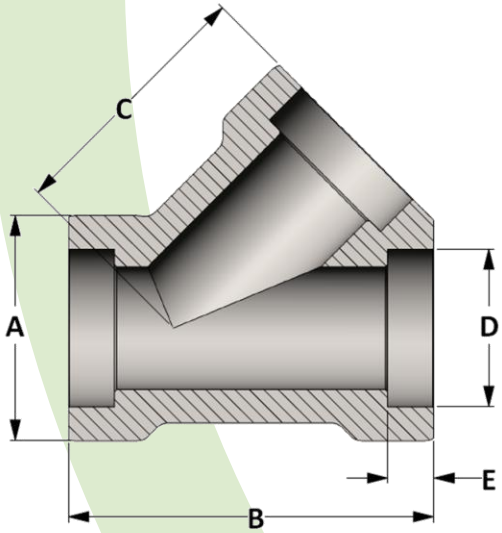

Active 3D Model

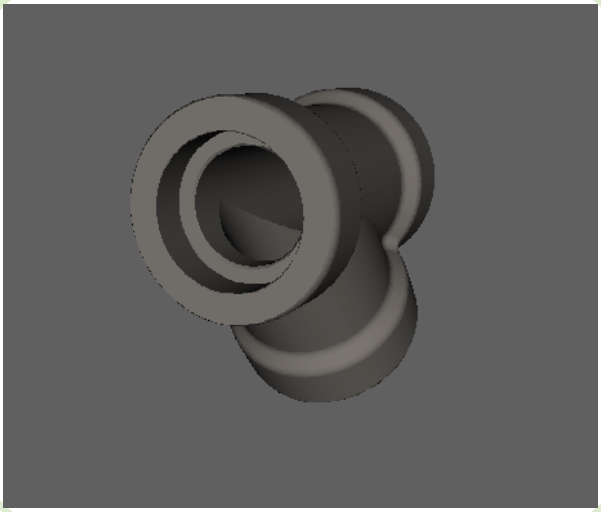

All dimensions are in inches • Weights are based on Carbon Steel

CLASS 3000 – Figure No. 13006										
PIPE SIZE	1/8	1/4	3/8	1/2	3/4	1	1-1/4	1-1/2	2	2-1/2
A	1.500	1.500	1.500	1.500	1.750	2.000	2.438	2.750	3.313	4.000
B	2.469	2.469	2.469	2.469	2.969	3.469	3.969	4.469	5.969	7.469
C	1.750	1.750	1.750	1.750	2.125	2.500	2.813	3.188	4.375	5.313
D	0.426	0.560	0.693	0.859	1.071	1.335	1.682	1.922	2.410	2.910
E	0.468	0.468	0.468	0.468	0.593	0.593	0.593	0.593	0.718	0.718
LBS	1.30	1.21	1.09	0.94	1.47	2.23	3.31	4.89	9.68	18.65

CLASS 6000 – Figure No. 16006										
PIPE SIZE	1/8	1/4	3/8	1/2	3/4	1	1-1/4	1-1/2	2	2-1/2
A	1.500	1.500	1.500	1.500	1.750	2.000	2.438	2.750	3.313	4.000
B	2.469	2.469	2.469	2.469	2.969	3.469	3.969	4.469	5.969	7.469
C	1.750	1.750	1.750	1.750	2.125	2.500	2.813	3.188	4.375	5.313
D	0.426	0.560	0.693	0.859	1.071	1.335	1.682	1.922	2.410	2.910
E	0.468	0.468	0.468	0.468	0.593	0.593	0.593	0.593	0.718	0.718
LBS	1.32	1.26	1.17	1.04	1.66	2.70	3.84	5.57	11.63	21.86

CLASS 9000 – Figure No. 19006										
PIPE SIZE	1/8	1/4	3/8	1/2	3/4	1	1-1/4	1-1/2	2	2-1/2
A	---	---	---	1.750	2.000	2.438	2.750	3.313	4.000	---
B	---	---	---	2.969	3.469	3.969	4.469	5.969	7.469	---
C	---	---	---	2.125	2.500	2.813	3.188	4.375	5.313	---
D	---	---	---	0.859	1.071	1.335	1.682	1.922	2.410	---
E	---	---	---	0.468	0.593	0.593	0.593	0.593	0.718	---
LBS	---	---	---	2.17	3.34	4.91	7.25	15.63	27.93	---

Threaded Lateral

ISO 9001 & PED Certified
Canadian Registered in all provinces

Material: Available in a complete range of Carbon Steels, Stainless Steels, Alloy Steels and Non-ferrous metals certified to ASTM, ASME, and Military standards.

Sizes: 1/8”- 2-1/2” in CL 3000 • 1/8” - 2” in CL 6000
Also available in CL 9000 and in reducing pipe sizes

Threads: American National Standard Taper Pipe Threads NPT (ANSI/ASME B1.20.1-1983)
Also available in other thread forms: NPTF, NPSC, NPSM, NGT, SAE, BSPT, BSPP and in any combination.
Left hand threads available upon request.

Threaded Pressure Class	Pipe Schedule
Class 3000	S160
Class 6000	XXH

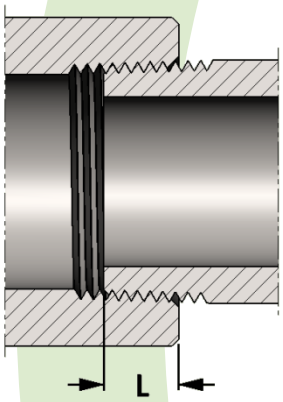

SIZE	L	SIZE	L
1/8	0.273	2	0.697
1/4	0.395	2-1/2	0.933
3/8	0.407	3	1.016
1/2	0.534	3-1/2	1.071
3/4	0.553	4	1.094
1	0.661	5	1.187
1-1/4	0.681	6	1.208
1-1/2	0.681	8	1.313

Length of thread screwed into fitting

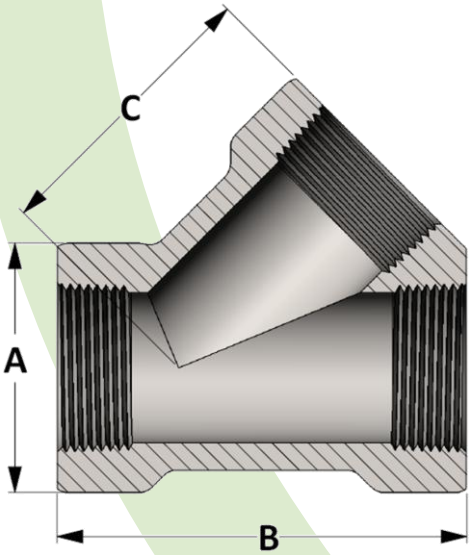

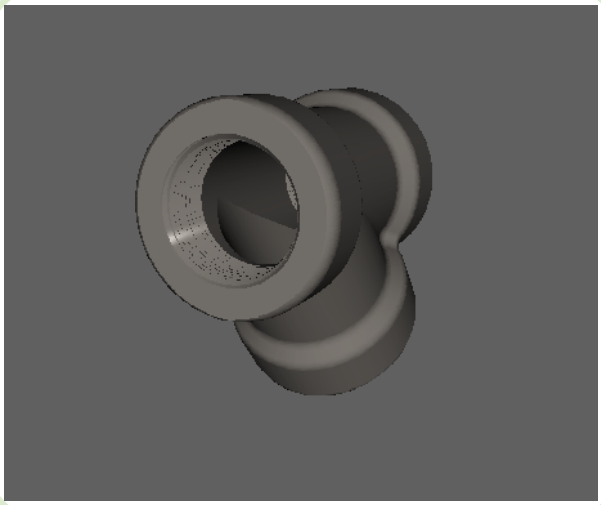

Active 3D Model

All dimensions are in inches • Weights are based on Carbon Steel

CLASS 3000 – Figure No. 03006										
PIPE SIZE	1/8	1/4	3/8	1/2	3/4	1	1-1/4	1-1/2	2	2-1/2
A	1.500	1.500	1.500	1.500	1.750	2.000	2.438	2.750	3.313	4.000
B	2.500	2.500	2.500	2.500	3.000	3.500	4.000	4.500	6.000	7.500
C	1.750	1.750	1.750	1.750	2.125	2.500	2.813	3.188	4.375	5.313
LBS	1.27	1.27	1.12	0.95	1.51	2.21	2.45	4.72	9.41	18.69

CLASS 6000 – Figure No. 06006										
PIPE SIZE	1/8	1/4	3/8	1/2	3/4	1	1-1/4	1-1/2	2	2-1/2
A	1.500	1.500	1.500	1.750	2.000	2.438	2.750	3.313	4.000	---
B	2.500	2.500	2.500	3.000	3.500	4.000	4.500	6.000	7.500	---
C	1.750	1.750	1.750	2.125	2.500	2.813	3.188	4.375	5.313	---
LBS	1.31	1.31	1.18	1.84	2.75	4.54	5.73	11.84	16.80	---

Penn MACHINE Since 1931

ISO 9001 & PED Certified
Canadian Registered in all provinces

Socket Weld Coupling

Specification: ASME B16.11

Material: Available in a complete range of Carbon Steels, Stainless Steels, Alloy Steels and Non-ferrous metals certified to ASTM, ASME, and Military standards.

Sizes: 1/8”- 12” in CL 3000 • 1/8”- 6” in CL 6000 • 1/8”- 4” in CL 9000
Also available in tube sizes, special pipe schedules/class rating, orifice holes, and special lengths

Socket Weld Pressure Class	Pipe Schedule
Class 3000	S80/XH
Class 6000	S160
Class 9000	XXH

Welding Gap and Minimum Flat Dimension For Socket Weld Fittings

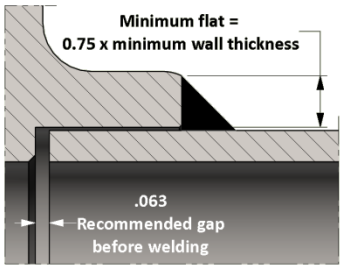

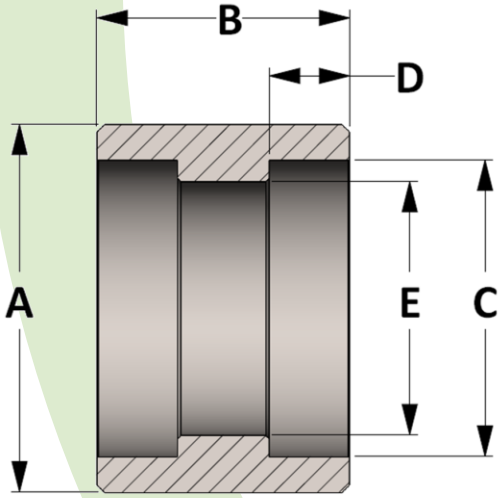

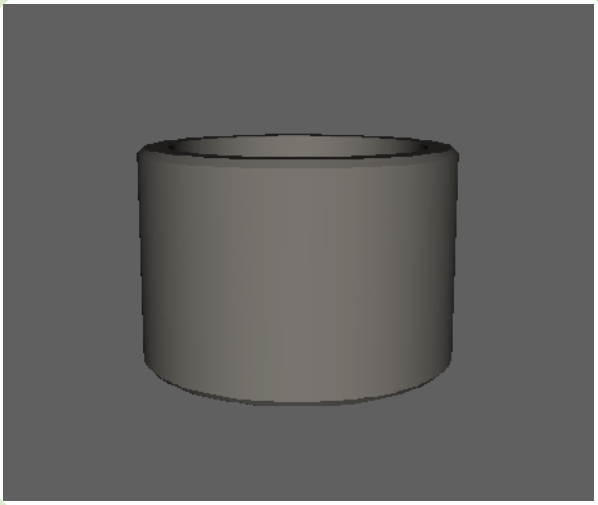

Active 3D Model

All dimensions are in inches • Weights are based on Carbon Steel

PIPE SIZE	CLASS 3000 – Figure No. 13007												
	1/8	1/4	3/8	1/2	3/4	1	1-1/4	1-1/2	2	2-1/2	3	3-1/2	4
A	0.750	0.875	1.063	1.250	1.500	1.813	2.250	2.500	3.000	3.625	4.313	5.000	5.500
B	1.125	1.125	1.125	1.250	1.438	1.563	1.563	1.563	2.063	2.063	2.063	2.313	2.313
C	0.426	0.560	0.693	0.859	1.071	1.335	1.682	1.922	2.410	2.910	3.536	4.036	4.545
D	0.438	0.438	0.438	0.438	0.531	0.531	0.531	0.531	0.656	0.656	0.656	0.781	0.781
E	0.269	0.364	0.493	0.622	0.824	1.049	1.380	1.610	2.067	2.469	3.068	3.548	4.026
LBS	0.01	0.12	0.17	0.25	0.39	0.58	0.90	1.01	1.74	2.51	3.34	5.26	5.55

PIPE SIZE	CLASS 6000 – Figure No. 16007												
	1/8	1/4	3/8	1/2	3/4	1	1-1/4	1-1/2	2	2-1/2	3	3-1/2	4
A	0.875	1.000	1.250	1.500	1.750	2.000	2.500	2.750	3.625	4.250	5.000	6.000	6.000
B	1.125	1.125	1.125	1.250	1.438	1.563	1.563	1.563	2.063	2.063	2.063	2.313	2.313
C	0.426	0.560	0.693	0.859	1.071	1.335	1.682	1.922	2.410	2.910	3.536	4.046	4.545
D	0.438	0.438	0.438	0.438	0.531	0.531	0.531	0.531	0.656	0.656	0.656	0.781	0.781
E	0.157	0.250	0.359	0.466	0.614	0.815	1.160	1.338	1.689	2.125	2.625	2.728	3.438
LBS	0.18	0.16	0.29	0.52	0.45	0.90	1.61	1.60	3.92	6.36	7.06	11.65	10.10

PIPE SIZE	CLASS 9000 – Figure No. 19007												
	1/8	1/4	3/8	1/2	3/4	1	1-1/4	1-1/2	2	2-1/2	3	3-1/2	4
A	1.000	1.250	1.750	1.750	2.000	2.500	2.750	3.000	3.625	4.500	5.500	6.000	6.500
B	1.125	1.125	1.125	1.250	1.438	1.563	1.563	1.563	2.063	2.063	2.063	2.313	2.313
C	0.426	0.560	0.693	0.859	1.071	1.335	1.682	1.922	2.410	2.910	3.536	4.036	4.545
D	0.438	0.438	0.438	0.438	0.531	0.531	0.531	0.531	0.656	0.656	0.656	0.781	0.781
E	0.031	0.064	0.171	0.252	0.434	0.599	0.896	1.100	1.503	1.771	2.300	2.728	3.438
LBS	0.21	0.33	0.46	0.76	1.00	1.69	1.90	2.10	4.05	6.40	12.10	14.62	16.21

Threaded Coupling

ISO 9001 & PED Certified
Canadian Registered in all provinces

Specification: ASME B16.11 for Class 3000 and 6000 only

Material: Available in a complete range of Carbon Steels, Stainless Steels, Alloy Steels and Non-ferrous metals certified to ASTM, ASME, and Military standards.

Sizes: 1/8”- 12” in CL 3000 and 1/8”- 8”in CL 6000
Also available in 1/8 - 8” in 150 # and 1/8”- 4” in CL 9000
And in special lengths

Threads: American National Standard Taper Pipe Threads NPT (ANSI/ASME B1.20.1-1983)
Also available in other thread forms: NPTF, NPSC, NPSM, NGT, SAE, BSPT, BSPP and in any combination.
Left hand threads available upon request.

Threaded Pressure Class	Pipe Schedule
Class 3000	S160
Class 6000	XXH

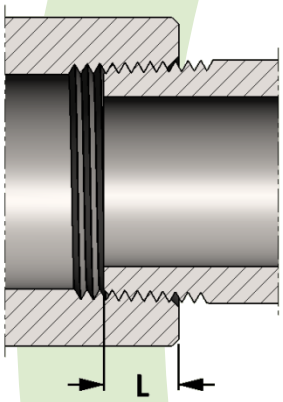

SIZE	L
1/8	0.273
1/4	0.395
3/8	0.407
1/2	0.534
3/4	0.553
1	0.661
1-1/4	0.681
1-1/2	0.681

SIZE	L
2	0.697
2-1/2	0.933
3	1.016
3-1/2	1.071
4	1.094
5	1.187
6	1.208
8	1.313

Length of thread screwed into fitting

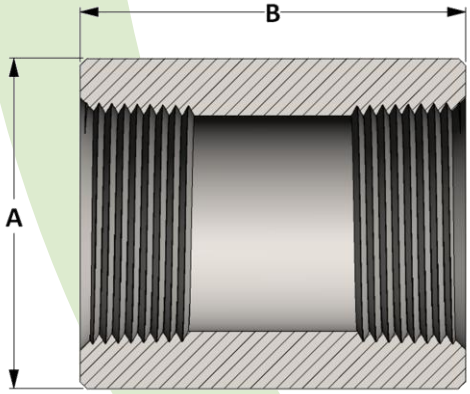

Active 3D Model

All dimensions are in inches • Weights are based on Carbon Steel

PIPE SIZE	CLASS 3000 – Figure No. 03007												
	1/8	1/4	3/8	1/2	3/4	1	1-1/4	1-1/2	2	2-1/2	3	3-1/2	4
A	0.625	0.750	0.875	1.125	1.375	1.750	2.250	2.500	3.000	3.625	4.250	4.750	5.500
B	1.250	1.375	1.500	1.875	2.000	2.375	2.625	3.125	3.375	3.625	4.250	4.500	4.750
LBS	0.08	0.10	0.14	0.29	0.42	0.83	1.58	2.16	2.99	4.75	6.51	7.93	12.37

PIPE SIZE	CLASS 6000 – Figure No. 06007												
	1/8	1/4	3/8	1/2	3/4	1	1-1/4	1-1/2	2	2-1/2	3	3-1/2	4
A	0.875	1.000	1.250	1.500	1.750	2.250	2.500	3.000	3.625	4.250	5.000	5.750	6.250
B	1.250	1.375	1.500	1.875	2.000	2.375	2.625	3.125	3.375	3.625	4.250	4.500	4.750
LBS	0.18	0.23	0.40	0.69	0.95	1.90	2.27	4.11	6.17	9.25	13.65	18.53	22.13

Penn MACHINE Since 1931

ISO 9001 & PED Certified
Canadian Registered in all provinces

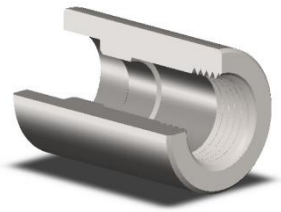

Socket Weld x Threaded Coupling

Material: Available in a complete range of Carbon Steels, Stainless Steels, Alloy Steels and Non-ferrous metals certified to ASTM, ASME, and Military standards.

Sizes: 1/4”- 6” in CL 3000 • 1/4”- 6” in CL 6000 • 1/4”- 4” in CL 9000
Also available in tube sizes, special pipe schedules/class rating, orifice holes, and special lengths

Threads: American National Standard Taper Pipe Threads NPT (ANSI/ASME B1.20.1-1983)
Also available in other thread forms: NPTF, NPSC, NPSM, NGT, SAE, BSPT, BSPP and in any combination.
Left hand threads available upon request.

Welding Gap and Minimum Flat Dimension For Socket Weld Fittings

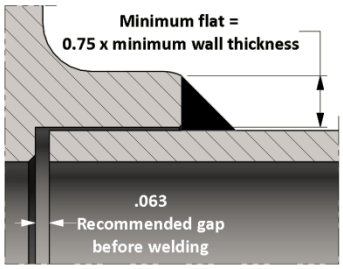

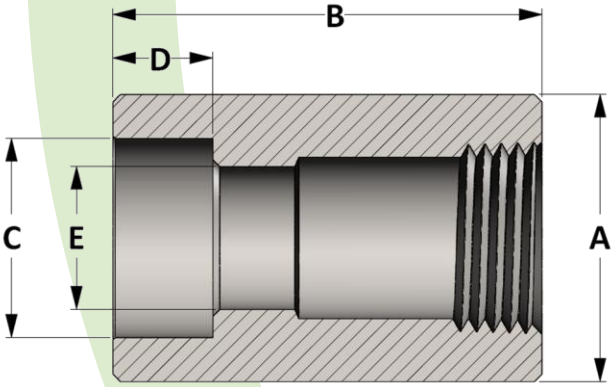

Active 3D Model

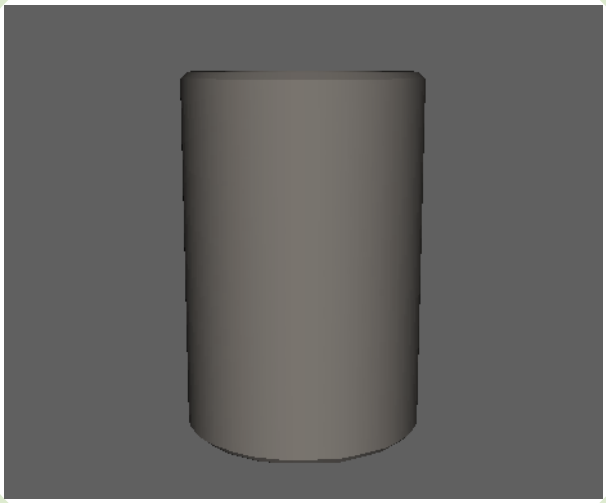

All dimensions are in inches • Weights are based on Carbon Steel

PIPE SIZE	CLASS 3000 – Figure No. 30060											
	1/4	3/8	1/2	3/4	1	1-1/4	1-1/2	2	2-1/2	3	3-1/2	4
A	0.875	1.063	1.250	1.500	1.813	2.250	2.500	3.000	3.625	4.313	5.000	5.500
B	1.375	1.500	1.875	2.000	2.375	2.625	3.125	3.375	3.625	4.250	4.500	4.750
C	0.560	0.693	0.859	1.071	1.335	1.682	1.922	2.410	2.910	3.536	4.036	4.545
D	0.438	0.438	0.438	0.531	0.531	0.531	0.531	0.656	0.656	0.656	0.781	0.781
E	0.364	0.493	0.622	0.824	1.049	1.380	1.610	2.067	2.469	3.068	3.548	4.026
LBS	0.16	0.25	0.41	0.57	0.83	1.62	2.18	3.03	4.89	6.95	11.72	12.77

PIPE SIZE	CLASS 6000 – Figure No. 60060											
	1/4	3/8	1/2	3/4	1	1-1/4	1-1/2	2	2-1/2	3	3-1/2	4
A	1.000	1.250	1.500	1.750	2.000	2.500	2.750	3.625	4.250	5.000	6.000	6.000
B	1.375	1.500	1.875	2.000	2.375	2.625	3.125	3.375	3.625	4.250	4.500	4.750
C	0.560	0.693	0.859	1.071	1.335	1.682	1.922	2.410	2.910	3.536	4.046	4.545
D	0.438	0.438	0.438	0.531	0.531	0.531	0.531	0.656	0.656	0.656	0.781	0.781
E	0.250	0.359	0.466	0.614	0.815	1.160	1.338	1.689	2.125	2.625	2.728	3.438
LBS	0.26	0.40	0.70	0.93	1.96	2.38	4.30	4.10	10.29	16.22	26.89	23.89

PIPE SIZE	CLASS 9000 – Figure No. 90060											
	1/4	3/8	1/2	3/4	1	1-1/4	1-1/2	2	2-1/2	3	3-1/2	4
A	1.250	1.750	1.750	2.000	2.500	2.750	3.000	3.625	4.500	5.500	6.000	6.500
B	1.375	1.500	1.875	2.000	2.375	2.625	3.125	3.375	3.625	4.250	4.500	4.750
C	0.560	0.693	0.859	1.071	1.335	1.682	1.922	2.410	2.910	3.536	4.036	4.545
D	0.438	0.438	0.438	0.531	0.531	0.531	0.531	0.656	0.656	0.656	0.781	0.781
E	0.064	0.171	0.252	0.434	0.599	0.896	1.100	1.503	1.771	2.300	2.728	3.438
LBS	0.42	0.92	1.05	1.89	2.93	3.57	7.26	6.67	11.58	20.14	23.84	27.47

Blind Coupling

ISO 9001 & PED Certified
Canadian Registered in all provinces

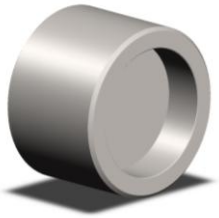

Material: Available in a complete range of Carbon Steels, Stainless Steels, Alloy Steels and Non-ferrous metals certified to ASTM, ASME, and Military standards.

Sizes: 1/8”- 12” in CL 3000 • 1/8”- 6” in CL 6000 • 1/8”- 4” in CL 9000
Also available in tube sizes and special lengths

Welding Gap and Minimum Flat Dimension For Socket Weld Fittings

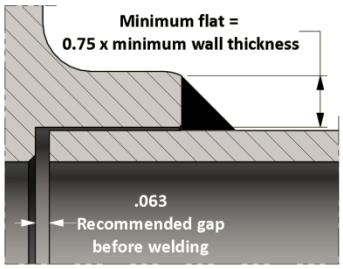

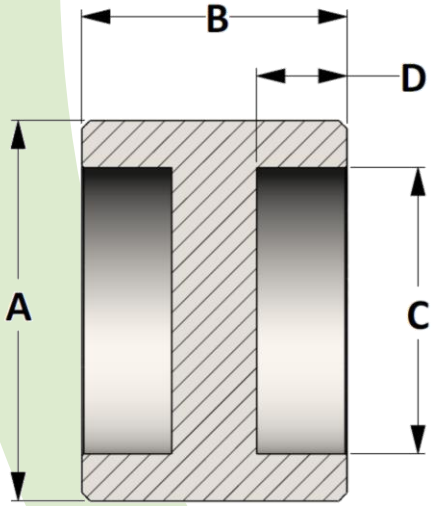

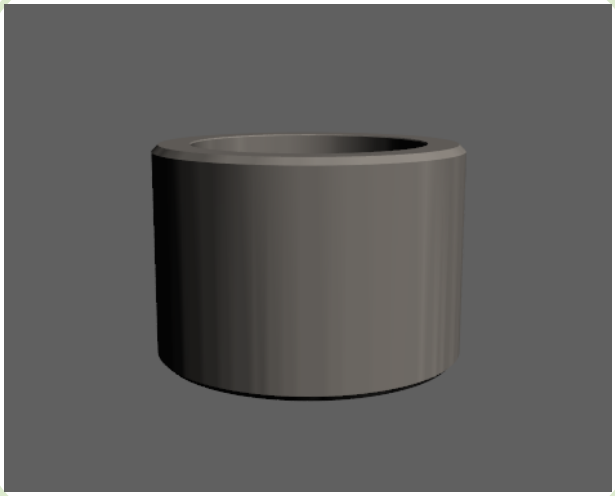

Active 3D Model

All dimensions are in inches • Weights are based on Carbon Steel

PIPE SIZE	CLASS 3000 – Figure No. 13159												
	1/8	1/4	3/8	1/2	3/4	1	1-1/4	1-1/2	2	2-1/2	3	3-1/2	4
A	0.750	0.875	1.063	1.250	1.500	1.813	2.250	2.500	3.000	3.625	4.313	5.000	5.500
B	1.125	1.125	1.125	1.250	1.437	1.563	1.563	1.563	2.063	2.063	2.063	2.313	2.313
C	0.426	0.560	0.693	0.859	1.071	1.335	1.682	1.922	2.410	2.910	3.536	4.036	4.545
D	0.438	0.438	0.438	0.438	0.531	0.531	0.531	0.531	0.656	0.656	0.656	0.781	0.781
LBS	0.11	0.13	0.19	0.29	0.45	0.72	1.09	1.30	2.44	3.57	4.90	7.22	8.41

PIPE SIZE	CLASS 6000 – Figure No. 16159												
	1/8	1/4	3/8	1/2	3/4	1	1-1/4	1-1/2	2	2-1/2	3	3-1/2	4
A	0.875	1.000	1.250	1.500	1.750	2.000	2.500	2.750	3.625	4.250	5.000	6.000	6.000
B	1.125	1.125	1.125	1.250	1.437	1.563	1.563	1.563	2.063	2.063	2.063	2.313	2.313
C	0.426	0.560	0.693	0.859	1.071	1.335	1.682	1.922	2.410	2.910	3.536	4.046	4.545
D	0.438	0.438	0.438	0.438	0.531	0.531	0.531	0.531	0.656	0.656	0.656	0.781	0.781
LBS	0.16	0.19	0.30	0.48	0.71	0.97	1.51	1.76	4.35	5.83	7.84	12.90	11.38

PIPE SIZE	CLASS 9000 – Figure No. 19159												
	1/8	1/4	3/8	1/2	3/4	1	1-1/4	1-1/2	2	2-1/2	3	3-1/2	4
A	1.000	1.250	1.750	1.750	2.000	2.500	2.750	3.000	3.625	4.500	5.500	6.000	6.500
B	1.125	1.125	1.125	1.250	1.437	1.563	1.563	1.563	2.063	2.063	2.063	2.313	2.313
C	0.426	0.560	0.693	0.859	1.071	1.335	1.682	1.922	2.410	2.910	3.536	4.036	4.545
D	0.438	0.438	0.438	0.438	0.531	0.531	0.531	0.531	0.656	0.656	0.656	0.781	0.781
LBS	0.22	0.33	0.67	0.71	1.01	1.76	1.97	2.26	4.35	6.84	10.26	12.90	14.60

Slip Coupling

ISO 9001 & PED Certified
Canadian Registered in all provinces

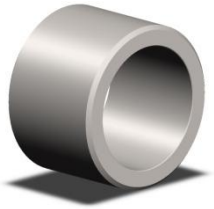

Material: Available in a complete range of Carbon Steels, Stainless Steels, Alloy Steels and Non-ferrous metals certified to ASTM, ASME, and Military standards.

Sizes: 1/8”- 12” in CL 3000 • 1/8”- 6” in CL 6000 • 1/8”- 4” in CL 9000
Also available in tube sizes and special lengths

Welding Gap and Minimum Flat Dimension For Socket Weld Fittings

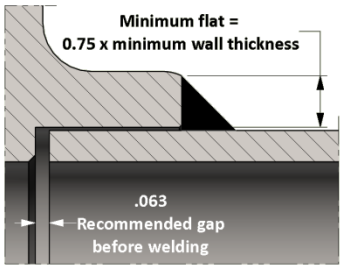

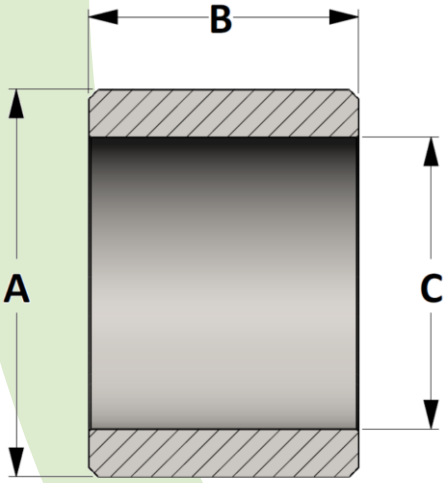

Active 3D Model

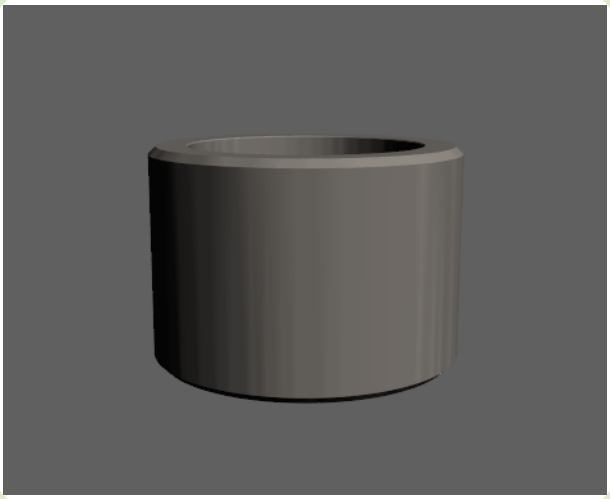

All dimensions are in inches • Weights are based on Carbon Steel

PIPE SIZE	CLASS 3000 – Figure No. 13025												
	1/8	1/4	3/8	1/2	3/4	1	1-1/4	1-1/2	2	2-1/2	3	3-1/2	4
A	0.750	0.875	1.063	1.250	1.500	1.813	2.250	2.500	3.000	3.625	4.313	5.000	5.500
B	1.125	1.125	1.125	1.250	1.437	1.563	1.563	1.563	2.063	2.063	2.063	2.313	2.313
C	0.426	0.560	0.693	0.859	1.071	1.335	1.682	1.922	2.410	2.910	3.536	4.036	4.545
LBS	0.10	0.11	0.16	0.23	0.35	0.52	0.78	0.89	1.47	2.15	2.81	4.49	4.95

PIPE SIZE	CLASS 6000 – Figure No. 16025												
	1/8	1/4	3/8	1/2	3/4	1	1-1/4	1-1/2	2	2-1/2	3	3-1/2	4
A	0.875	1.000	1.250	1.500	1.750	2.000	2.500	2.750	3.625	4.250	5.000	6.000	6.000
B	1.125	1.125	1.125	1.250	1.437	1.563	1.563	1.563	2.063	2.063	2.063	2.313	2.313
C	0.426	0.560	0.693	0.859	1.071	1.335	1.682	1.922	2.410	2.910	3.536	4.046	4.545
LBS	0.15	0.17	0.27	0.42	0.61	0.77	1.19	1.35	3.37	4.41	5.75	10.17	7.92

PIPE SIZE	CLASS 9000 – Figure No. 19025												
	1/8	1/4	3/8	1/2	3/4	1	1-1/4	1-1/2	2	2-1/2	3	3-1/2	4
A	1.000	1.250	1.750	1.750	2.000	2.500	2.750	3.000	3.625	4.500	5.500	6.000	6.500
B	1.125	1.125	1.125	1.250	1.437	1.563	1.563	1.563	2.063	2.063	2.063	2.313	2.313
C	0.426	0.560	0.693	0.859	1.071	1.335	1.682	1.922	2.410	2.910	3.536	4.036	4.545
LBS	0.21	0.31	0.65	0.65	0.91	1.56	1.65	1.85	3.37	5.42	8.17	10.17	11.14

ISO 9001 & PED Certified
Canadian Registered in all provinces

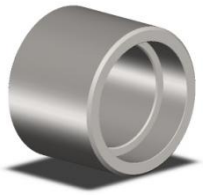

Socket Weld Half Coupling

Specification: ASME B16.11

Material: Available in a complete range of Carbon Steels, Stainless Steels, Alloy Steels and Non-ferrous metals certified to ASTM, ASME, and Military standards.

Sizes: 1/8”- 12” in CL 3000 • 1/8”- 6” in CL 6000 • 1/8”- 4” in CL 9000
Also available in tube sizes, special pipe schedules/class rating, orifice holes, and special lengths

Socket Weld Pressure Class	Pipe Schedule
Class 3000	S80/XH
Class 6000	S160
Class 9000	XXH

Welding Gap and Minimum Flat Dimension For Socket Weld Fittings

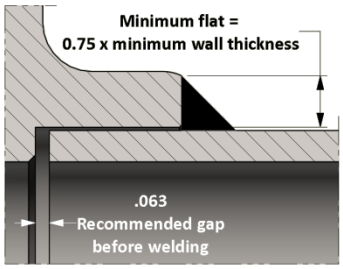

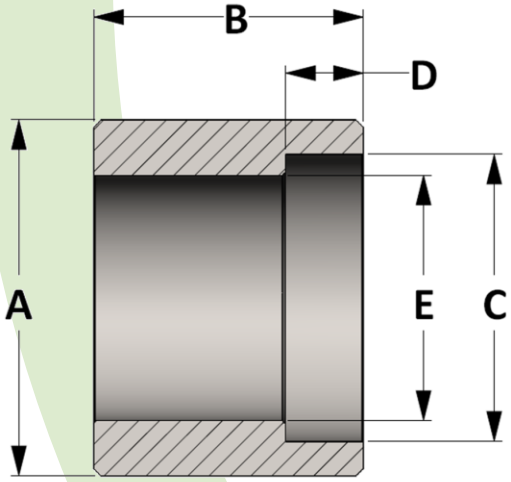

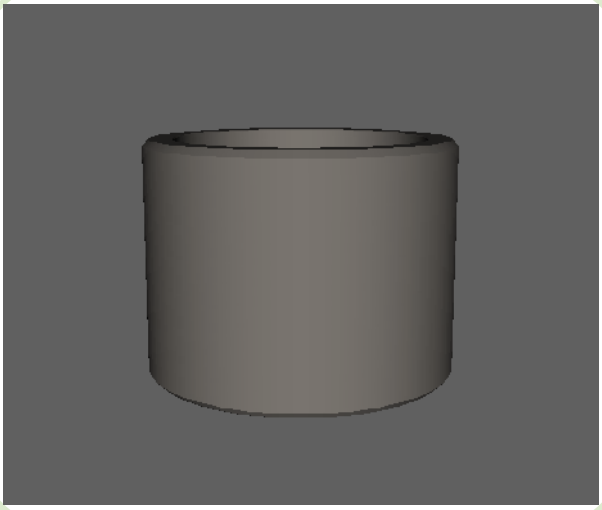

Active 3D Model

All dimensions are in inches • Weights are based on Carbon Steel

PIPE SIZE	CLASS 3000 – Figure No. 13009												
	1/8	1/4	3/8	1/2	3/4	1	1-1/4	1-1/2	2	2-1/2	3	3-1/2	4
A	0.750	0.875	1.063	1.250	1.500	1.813	2.250	2.500	3.000	3.625	4.313	5.000	5.500
B	1.050	1.050	1.112	1.302	1.456	1.636	1.706	1.766	2.261	2.331	2.391	2.646	2.646
C	0.426	0.560	0.693	0.859	1.071	1.335	1.682	1.922	2.410	2.910	3.536	4.036	4.545
D	0.438	0.438	0.438	0.438	0.531	0.531	0.531	0.531	0.656	0.656	0.656	0.781	0.781
E	0.269	0.364	0.493	0.622	0.824	1.049	1.380	1.610	2.067	2.469	3.068	3.548	4.026
LBS	0.09	0.11	0.14	0.28	0.40	0.65	1.05	1.23	2.05	4.32	5.72	7.49	9.84

PIPE SIZE	CLASS 6000 – Figure No. 16009												
	1/8	1/4	3/8	1/2	3/4	1	1-1/4	1-1/2	2	2-1/2	3	3-1/2	4
A	0.875	1.000	1.250	1.500	1.750	2.000	2.500	2.750	3.625	4.250	5.000	6.000	6.000
B	1.050	1.050	1.112	1.302	1.456	1.636	1.706	1.766	2.261	2.331	2.391	2.646	2.646
C	0.426	0.560	0.693	0.859	1.071	1.335	1.682	1.922	2.410	2.910	3.536	4.046	4.545
D	0.438	0.438	0.438	0.438	0.531	0.531	0.531	0.531	0.656	0.656	0.656	0.781	0.781
E	0.157	0.250	0.359	0.466	0.614	0.815	1.160	1.338	1.689	2.125	2.625	2.728	3.438
LBS	0.16	0.16	0.29	0.54	0.70	1.10	1.61	3.02	4.71	7.35	10.14	13.37	18.35

PIPE SIZE	CLASS 9000 – Figure No. 19009												
	1/8	1/4	3/8	1/2	3/4	1	1-1/4	1-1/2	2	2-1/2	3	3-1/2	4
A	1.000	1.250	1.750	1.750	2.000	2.500	2.750	3.000	3.625	4.500	5.500	6.000	6.500
B	1.050	1.050	1.112	1.302	1.456	1.636	1.706	1.766	2.261	2.331	2.391	2.646	2.646
C	0.426	0.560	0.693	0.859	1.071	1.335	1.682	1.922	2.410	2.910	3.536	4.036	4.545
D	0.438	0.438	0.438	0.438	0.531	0.531	0.531	0.531	0.656	0.656	0.656	0.781	0.781
E	0.031	0.064	0.171	0.252	0.434	0.599	0.896	1.100	1.503	1.771	2.300	2.728	3.438
LBS	0.21	0.33	0.70	0.84	1.12	4.15	3.14	4.95	5.10	8.30	13.77	15.19	16.29

ISO 9001 & PED Certified
Canadian Registered in all provinces

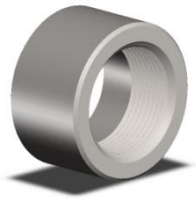

Threaded Half Coupling

Specification: ASME B16.11 for Class 3000 and 6000 only

Material: Available in a complete range of Carbon Steels, Stainless Steels, Alloy Steels and Non-ferrous metals certified to ASTM, ASME, and Military standards.

Sizes: 1/8”- 12” in CL 3000 and 1/8”- 8”in CL 6000
Also available in 1/8 - 8” in 150 # and 1/8”- 4” in CL 9000
And in special lengths

Threads: American National Standard Taper Pipe Threads NPT (ANSI/ASME B1.20.1-1983)
Also available in other thread forms: NPTF, NPSC, NPSM, NGT, SAE, BSPT, BSPP and in any combination.
Left hand threads available upon request.

Threaded Pressure Class	Pipe Schedule
Class 3000	S160
Class 6000	XXH

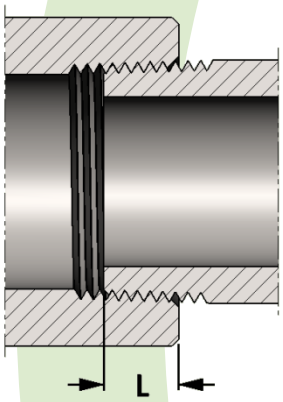

SIZE	L	SIZE	L
1/8	0.273	2	0.697
1/4	0.395	2-1/2	0.933
3/8	0.407	3	1.016
1/2	0.534	3-1/2	1.071
3/4	0.553	4	1.094
1	0.661	5	1.187
1-1/4	0.681	6	1.208
1-1/2	0.681	8	1.313

Length of thread screwed into fitting

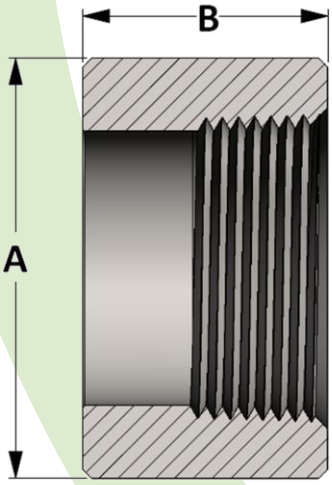

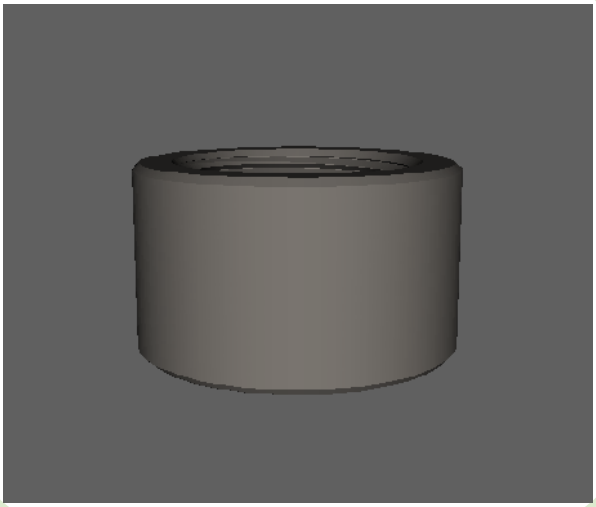

Active 3D Model

All dimensions are in inches • Weights are based on Carbon Steel

PIPE SIZE	CLASS 3000 – Figure No. 03009												
	1/8	1/4	3/8	1/2	3/4	1	1-1/4	1-1/2	2	2-1/2	3	3-1/2	4
A	0.625	0.750	0.875	1.125	1.375	1.750	2.250	2.500	3.000	3.625	4.250	4.750	5.500
B	0.625	0.688	0.750	0.938	1.000	1.188	1.313	1.563	1.688	1.813	2.125	2.250	2.375
LBS	0.04	0.05	0.11	0.15	0.21	0.41	0.79	1.09	1.53	2.38	3.33	4.02	6.16

PIPE SIZE	CLASS 6000 – Figure No. 06009												
	1/8	1/4	3/8	1/2	3/4	1	1-1/4	1-1/2	2	2-1/2	3	3-1/2	4
A	0.875	1.000	1.250	1.500	1.750	2.250	2.500	3.000	3.625	4.250	5.000	5.750	6.250
B	0.625	0.688	0.750	0.938	1.000	1.188	1.313	1.563	1.688	1.813	2.125	2.250	2.375
LBS	0.15	0.17	0.20	0.35	0.48	0.95	2.02	2.55	3.80	5.20	7.54	9.69	15.19

Penn MACHINE Since 1931

ISO 9001 & PED Certified
Canadian Registered in all provinces

Socket Weld Reducer

Specification: ASME B16.11

Material: Available in a complete range of Carbon Steels, Stainless Steels, Alloy Steels and Non-ferrous metals certified to ASTM, ASME, and Military standards.

Sizes: 1/4”- 12” in CL 3000 • 1/4”- 6” in CL 6000 • 1/4”- 4” in CL 9000
Also available in tube sizes, special pipe schedules/class rating, orifice holes, and special lengths

Socket Weld Pressure Class	Pipe Schedule
Class 3000	S80/XH
Class 6000	S160
Class 9000	XXH

Welding Gap and Minimum Flat Dimension For Socket Weld Fittings

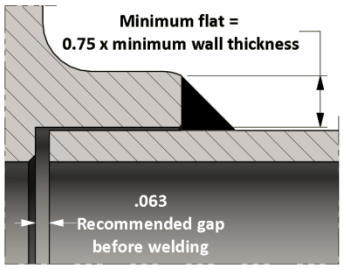

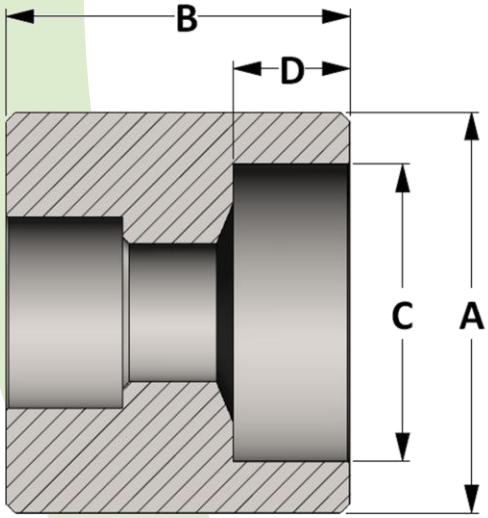

Active 3D Model

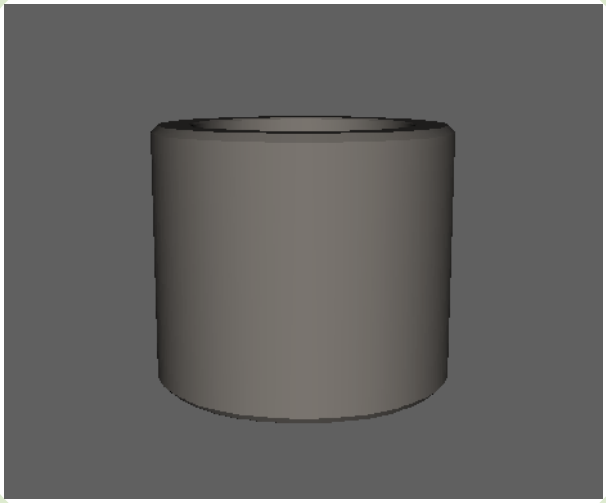

All dimensions are in inches • Weights are based on Carbon Steel
Waterway of reducer is determined by schedule of small end

PIPE SIZE	CLASS 3000 – Figure No. 13008												
	1/8	1/4	3/8	1/2	3/4	1	1-1/4	1-1/2	2	2-1/2	3	3-1/2	4
A	---	0.875	1.063	1.250	1.500	1.813	2.250	2.500	3.000	3.625	4.313	5.000	5.500
B	---	1.125	1.125	1.250	1.438	1.563	1.563	1.563	2.063	2.063	2.063	2.313	2.313
C	---	0.560	0.693	0.859	1.071	1.335	1.682	1.922	2.410	2.910	3.536	4.036	4.545
D	---	0.438	0.438	0.438	0.531	0.531	0.531	0.531	0.656	0.656	0.656	0.781	0.781
LBS	---	0.14	0.21	0.33	0.55	0.89	1.39	1.70	3.09	4.60	6.51	9.79	11.72

PIPE SIZE	CLASS 6000 – Figure No. 16008												
	1/8	1/4	3/8	1/2	3/4	1	1-1/4	1-1/2	2	2-1/2	3	3-1/2	4
A	---	1.000	1.250	1.500	1.750	2.000	2.500	2.750	3.625	4.250	5.000	6.000	6.000
B	---	1.125	1.125	1.250	1.438	1.563	1.563	1.563	2.063	2.063	2.063	2.313	2.313
C	---	0.560	0.693	0.859	1.071	1.335	1.682	1.922	2.410	2.910	3.536	4.036	4.545
D	---	0.438	0.438	0.438	0.531	0.531	0.531	0.531	0.656	0.656	0.656	0.781	0.781
LBS	---	0.20	0.32	0.53	0.82	1.15	1.81	2.16	5.13	6.99	9.57	15.58	14.82

PIPE SIZE	CLASS 9000 – Figure No. 19008												
	1/8	1/4	3/8	1/2	3/4	1	1-1/4	1-1/2	2	2-1/2	3	3-1/2	4
A	---	1.250	1.500	1.750	2.000	2.500	2.750	3.000	3.625	4.500	5.500	6.000	6.500
B	---	1.125	1.125	1.250	1.438	1.563	1.563	1.563	2.063	2.063	2.063	2.313	2.313
C	---	0.560	0.693	0.859	1.071	1.335	1.682	1.922	2.410	2.910	3.536	4.036	4.545
D	---	0.438	0.438	0.438	0.531	0.531	0.531	0.531	0.656	0.656	0.656	0.781	0.781
LBS	---	0.34	0.55	0.76	1.12	1.93	2.26	2.65	5.02	7.90	11.88	15.48	17.92

Threaded Reducer

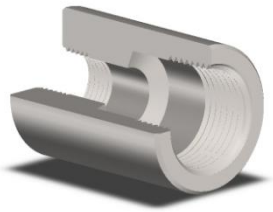

ISO 9001 & PED Certified
Canadian Registered in all provinces

Specification: ASME B16.11 for Class 3000 and 6000 only

Material: Available in a complete range of Carbon Steels, Stainless Steels, Alloy Steels and Non-ferrous metals certified to ASTM, ASME, and Military standards.

Sizes: 1/4”- 12” in CL 3000 and 1/4”- 8”in CL 6000
Also available in 1/4”- 4” in CL 9000

Threads: American National Standard Taper Pipe Threads NPT (ANSI/ASME B1.20.1-1983)
Also available in other thread forms: NPTF, NPSC, NPSM, NGT, SAE, BSPT, BSPP and in any combination.
Left hand threads available upon request.

Threaded Pressure Class	Pipe Schedule
Class 3000	S160
Class 6000	XXH

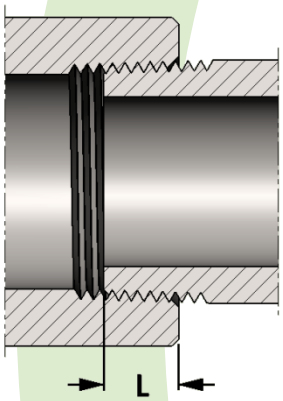

SIZE	L	SIZE	L
1/8	0.273	2	0.697
1/4	0.395	2-1/2	0.933
3/8	0.407	3	1.016
1/2	0.534	3-1/2	1.071
3/4	0.553	4	1.094
1	0.661	5	1.187
1-1/4	0.681	6	1.208
1-1/2	0.681	8	1.313

Length of thread screwed into fitting

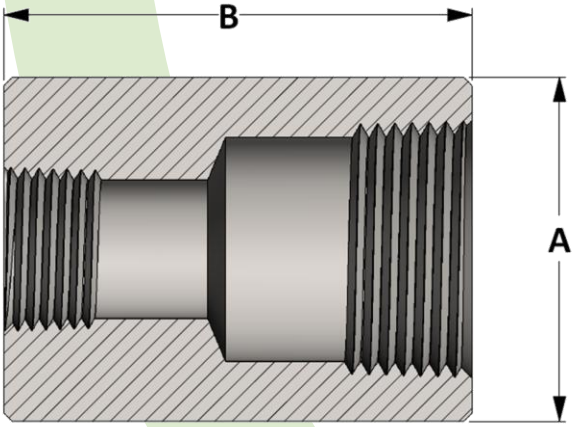

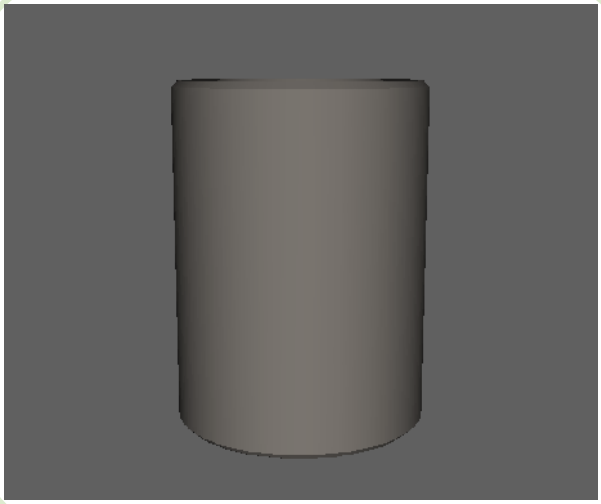

Active 3D Model

All dimensions are in inches • Weights are based on Carbon Steel

PIPE SIZE	CLASS 3000 – Figure No. 03008												
	1/8	1/4	3/8	1/2	3/4	1	1-1/4	1-1/2	2	2-1/2	3	3-1/2	4
A	---	0.750	0.875	1.125	1.375	1.750	2.250	2.500	3.000	3.625	4.250	4.750	5.500
B	---	1.375	1.500	1.875	2.000	2.375	2.625	3.125	3.375	3.625	4.250	4.500	4.750
LBS	---	0.12	0.18	0.39	0.61	1.22	2.20	3.22	4.69	7.62	11.44	14.91	21.85

PIPE SIZE	CLASS 6000 – Figure No. 06008												
	1/8	1/4	3/8	1/2	3/4	1	1-1/4	1-1/2	2	2-1/2	3	3-1/2	4
A	---	1.000	1.250	1.500	1.750	2.250	2.500	3.000	3.625	4.250	5.000	5.750	6.250
B	---	1.375	1.500	1.875	2.000	2.375	2.625	3.125	3.375	3.625	4.250	4.500	4.750
LBS	---	0.26	0.45	0.79	1.13	2.27	2.89	5.13	7.78	11.57	17.97	25.36	31.11

Penn MACHINE Since 1931

ISO 9001 & PED Certified
Canadian Registered in all provinces

Socket Weld x Threaded Reducer

Specification: ASME B16.11 for Class 3000 and 6000 only

Material: Available in a complete range of Carbon Steels, Stainless Steels, Alloy Steels and Non-ferrous metals certified to ASTM, ASME, and Military standards.

Sizes: 1/4”- 12” in CL 3000 • 1/4”- 6” in CL 6000 • 1/4”- 4” in CL 9000
Also available in tube sizes, special pipe schedules/class rating, and special lengths

Threads: American National Standard Taper Pipe Threads NPT (ANSI/ASME B1.20.1-1983)
Also available in other thread forms: NPTF, NPSC, NPSM, NGT, SAE, BSPT, BSPP and in any combination.
Left hand threads available upon request.

Welding Gap and Minimum Flat Dimension For Socket Weld Fittings

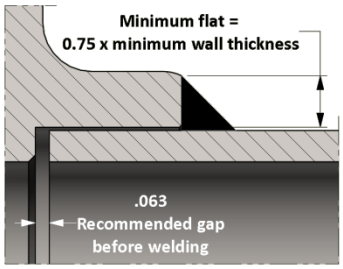

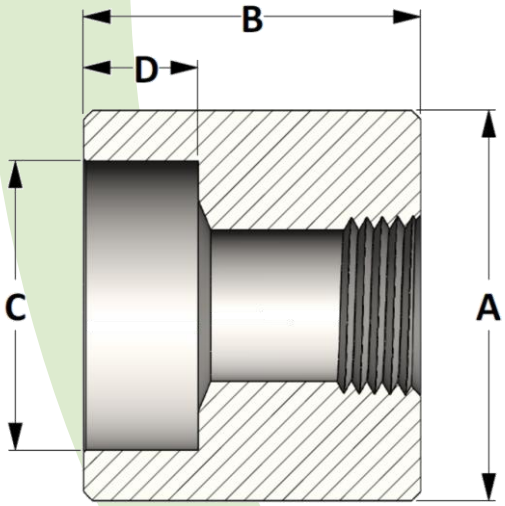

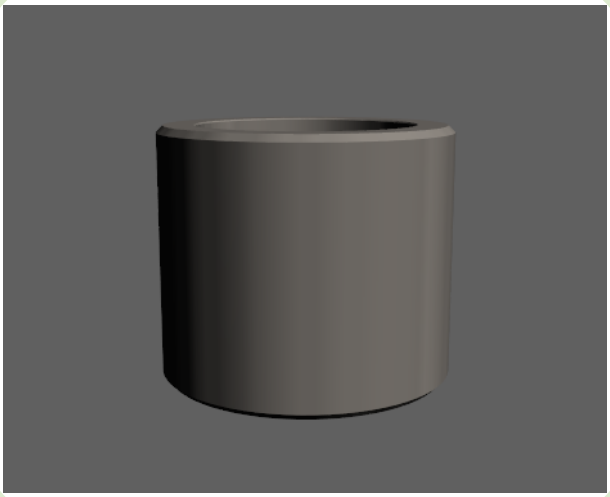

Active 3D Model

All dimensions are in inches • Weights are based on Carbon Steel
Waterway of reducer is determined by schedule of small end

PIPE SIZE	CLASS 3000 – Figure No. 30061												
	1/8	1/4	3/8	1/2	3/4	1	1-1/4	1-1/2	2	2-1/2	3	3-1/2	4
A	---	0.875	1.063	1.250	1.500	1.813	2.250	2.500	3.000	3.625	4.313	5.000	5.500
B	---	1.125	1.125	1.250	1.438	1.563	1.563	1.563	2.063	2.063	2.063	2.313	2.313
C	---	0.560	0.693	0.859	1.071	1.335	1.682	1.922	2.410	2.910	3.536	4.036	4.545
D	---	0.438	0.438	0.438	0.531	0.531	0.531	0.531	0.656	0.656	0.656	0.781	0.781
LBS	---	0.14	0.21	0.33	0.55	0.89	1.39	1.70	3.09	4.60	6.51	9.79	11.72

PIPE SIZE	CLASS 6000 – Figure No. 60061												
	1/8	1/4	3/8	1/2	3/4	1	1-1/4	1-1/2	2	2-1/2	3	3-1/2	4
A	---	1.000	1.250	1.500	1.750	2.000	2.500	2.750	3.625	4.250	5.000	6.000	6.000
B	---	1.125	1.125	1.250	1.438	1.563	1.563	1.563	2.063	2.063	2.063	2.313	2.313
C	---	0.560	0.693	0.859	1.071	1.335	1.682	1.922	2.410	2.910	3.536	4.036	4.545
D	---	0.438	0.438	0.438	0.531	0.531	0.531	0.531	0.656	0.656	0.656	0.781	0.781
LBS	---	0.20	0.32	0.53	0.82	1.15	1.81	2.16	5.13	6.99	9.57	15.58	14.82

PIPE SIZE	CLASS 9000 – Figure No. 90061												
	1/8	1/4	3/8	1/2	3/4	1	1-1/4	1-1/2	2	2-1/2	3	3-1/2	4
A	---	1.250	1.500	1.750	2.000	2.500	2.750	3.000	3.625	4.500	5.500	6.000	6.500
B	---	1.125	1.125	1.250	1.438	1.563	1.563	1.563	2.063	2.063	2.063	2.313	2.313
C	---	0.560	0.693	0.859	1.071	1.335	1.682	1.922	2.410	2.910	3.536	4.036	4.545
D	---	0.438	0.438	0.438	0.531	0.531	0.531	0.531	0.656	0.656	0.656	0.781	0.781
LBS	---	0.34	0.55	0.76	1.12	1.93	2.26	2.65	5.02	7.90	11.88	15.48	17.92

ISO 9001 & PED Certified
Canadian Registered in all provinces

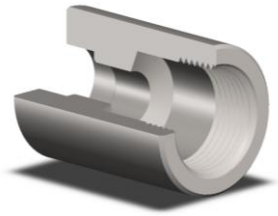

Threaded x Socket Weld Reducer

Specification: ASME B16.11 for Class 3000 and 6000 only

Material: Available in a complete range of Carbon Steels, Stainless Steels, Alloy Steels and Non-ferrous metals certified to ASTM, ASME, and Military standards.

Sizes: 1/4”- 12” in CL 3000 and 1/4”- 8”in CL 6000
Also available in 1/4”- 4” in CL 9000

Threads: American National Standard Taper Pipe Threads NPT (ANSI/ASME B1.20.1-1983)
Also available in other thread forms: NPTF, NPSC, NPSM, NGT, SAE, BSPT, BSPP and in any combination.
Left hand threads available upon request.

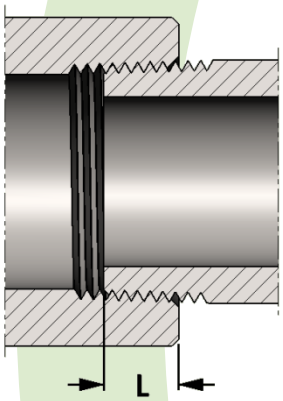

SIZE	L
1/8	0.273
1/4	0.395
3/8	0.407
1/2	0.534
3/4	0.553
1	0.661
1-1/4	0.681
1-1/2	0.681

SIZE	L
2	0.697
2-1/2	0.933
3	1.016
3-1/2	1.071
4	1.094
5	1.187
6	1.208
8	1.313

Length of thread screwed into fitting

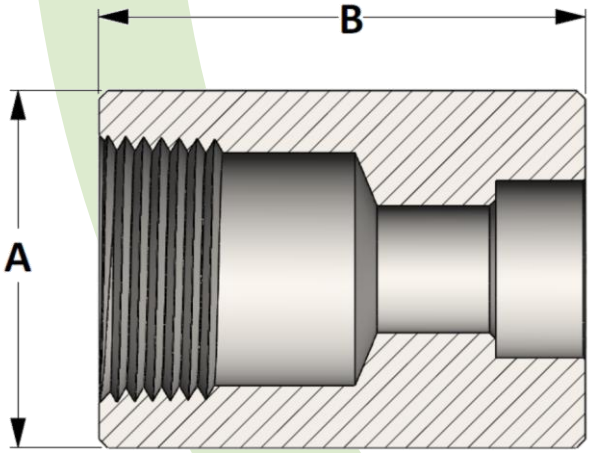

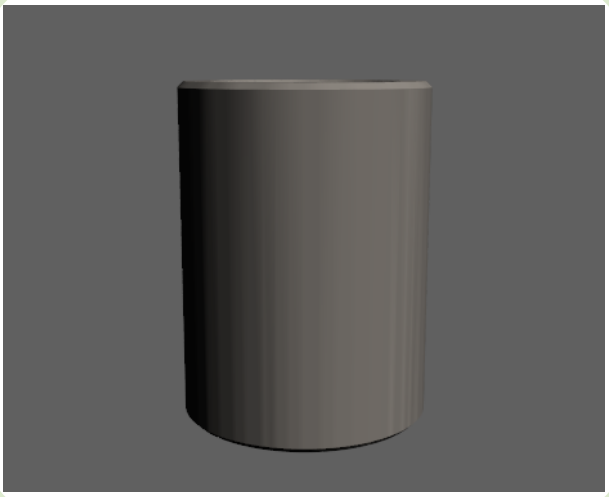

Active 3D Model

All dimensions are in inches • Weights are based on Carbon Steel

PIPE SIZE	CLASS 3000 – Figure No. 30060												
	1/8	1/4	3/8	1/2	3/4	1	1-1/4	1-1/2	2	2-1/2	3	3-1/2	4
A	---	0.750	0.875	1.125	1.375	1.750	2.250	2.500	3.000	3.625	4.250	4.750	5.500
B	---	1.375	1.500	1.875	2.000	2.375	2.625	3.125	3.375	3.625	4.250	4.500	4.750
LBS	---	0.12	0.18	0.39	0.61	1.22	2.20	3.22	4.69	7.62	11.44	14.91	21.85

PIPE SIZE	CLASS 6000 – Figure No. 60060												
	1/8	1/4	3/8	1/2	3/4	1	1-1/4	1-1/2	2	2-1/2	3	3-1/2	4
A	---	1.000	1.250	1.500	1.750	2.250	2.500	3.000	3.625	4.250	5.000	5.750	6.250
B	---	1.375	1.500	1.875	2.000	2.375	2.625	3.125	3.375	3.625	4.250	4.500	4.750
LBS	---	0.26	0.45	0.79	1.13	2.27	2.89	5.13	7.78	11.57	17.97	25.36	31.11

ISO 9001 & PED Certified
Canadian Registered in all provinces

Socket Weld Eccentric Reducer

Specification: ASME B16.11

Material: Available in a complete range of Carbon Steels, Stainless Steels, Alloy Steels and Non-ferrous metals certified to ASTM, ASME, and Military standards.

Sizes: 1/4”- 12” in CL 3000 • 1/4”- 6” in CL 6000 • 1/4”- 4” in CL 9000
Also available in tube sizes, special pipe schedules/class rating, orifice holes, and special lengths

Socket Weld Pressure Class	Pipe Schedule
Class 3000	S80/XH
Class 6000	S160
Class 9000	XXH

Welding Gap and Minimum Flat Dimension For Socket Weld Fittings

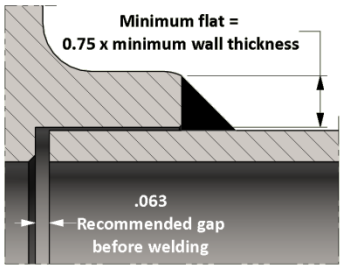

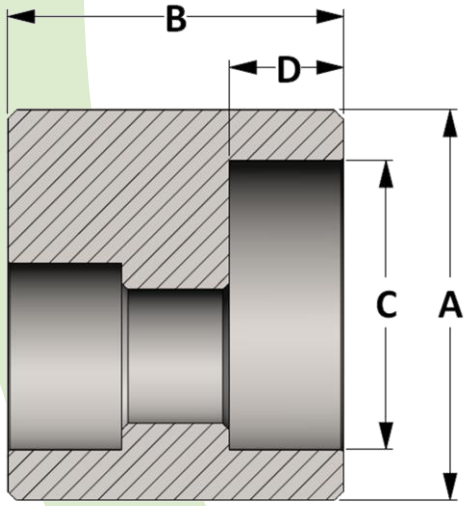

Active 3D Model

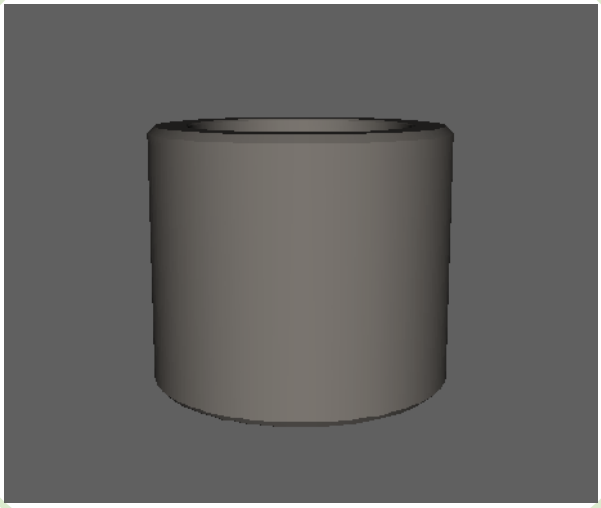

All dimensions are in inches • Weights are based on Carbon Steel
Waterway of reducer is determined by schedule of small end

PIPE SIZE	CLASS 3000 – Figure No. 13024												
	1/8	1/4	3/8	1/2	3/4	1	1-1/4	1-1/2	2	2-1/2	3	3-1/2	4
A	---	0.875	1.063	1.250	1.500	1.813	2.250	2.500	3.000	3.625	4.313	5.000	5.500
B	---	1.125	1.125	1.250	1.438	1.563	1.563	1.563	2.063	2.063	2.063	2.313	2.313
C	---	0.560	0.693	0.859	1.071	1.335	1.682	1.922	2.410	2.910	3.536	4.036	4.545
D	---	0.438	0.438	0.438	0.531	0.531	0.531	0.531	0.656	0.656	0.656	0.781	0.781
LBS	---	0.14	0.21	0.33	0.55	0.89	1.39	1.70	3.09	4.60	6.51	9.79	11.72

PIPE SIZE	CLASS 6000 – Figure No. 16024												
	1/8	1/4	3/8	1/2	3/4	1	1-1/4	1-1/2	2	2-1/2	3	3-1/2	4
A	---	1.000	1.250	1.500	1.750	2.000	2.500	2.750	3.625	4.250	5.000	6.000	6.000
B	---	1.125	1.125	1.250	1.438	1.563	1.563	1.563	2.063	2.063	2.063	2.313	2.313
C	---	0.560	0.693	0.859	1.071	1.335	1.682	1.922	2.410	2.910	3.536	4.036	4.545
D	---	0.438	0.438	0.438	0.531	0.531	0.531	0.531	0.656	0.656	0.656	0.781	0.781
LBS	---	0.20	0.32	0.53	0.82	1.15	1.81	2.16	5.13	6.99	9.57	15.58	14.82

PIPE SIZE	CLASS 9000 – Figure No. 19024												
	1/8	1/4	3/8	1/2	3/4	1	1-1/4	1-1/2	2	2-1/2	3	3-1/2	4
A	---	1.250	1.500	1.750	2.000	2.500	2.750	3.000	3.625	4.500	5.500	6.000	6.500
B	---	1.125	1.125	1.250	1.438	1.563	1.563	1.563	2.063	2.063	2.063	2.313	2.313
C	---	0.560	0.693	0.859	1.071	1.335	1.682	1.922	2.410	2.910	3.536	4.036	4.545
D	---	0.438	0.438	0.438	0.531	0.531	0.531	0.531	0.656	0.656	0.656	0.781	0.781
LBS	---	0.34	0.55	0.76	1.12	1.93	2.26	2.65	5.02	7.90	11.88	15.48	17.92

ISO 9001 & PED Certified
Canadian Registered in all provinces

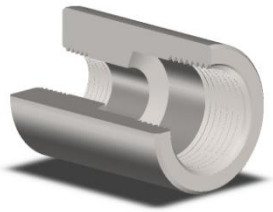

Threaded Eccentric Reducer

Specification: ASME B16.11

Material: Available in a complete range of Carbon Steels, Stainless Steels, Alloy Steels and Non-ferrous metals certified to ASTM, ASME, and Military standards.

Sizes: 1/4”- 12” in CL 3000 and 1/4”- 8”in CL 6000
Also available in 1/4”- 4” in CL 9000

Threads: American National Standard Taper Pipe Threads NPT (ANSI/ASME B1.20.1-1983)
Also available in other thread forms: NPTF, NPSC, NPSM, NGT, SAE, BSPT, BSPP and in any combination.
Left hand threads available upon request.

Threaded Pressure Class	Pipe Schedule
Class 3000	S160
Class 6000	XXH

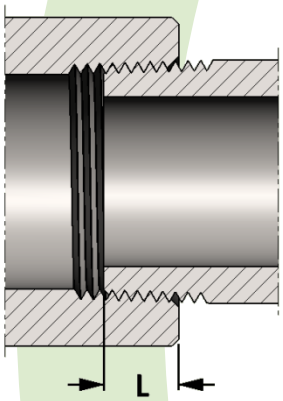

SIZE	L	SIZE	L
1/8	0.273	2	0.697
1/4	0.395	2-1/2	0.933
3/8	0.407	3	1.016
1/2	0.534	3-1/2	1.071
3/4	0.553	4	1.094
1	0.661	5	1.187
1-1/4	0.681	6	1.208
1-1/2	0.681	8	1.313

Length of thread screwed into fitting

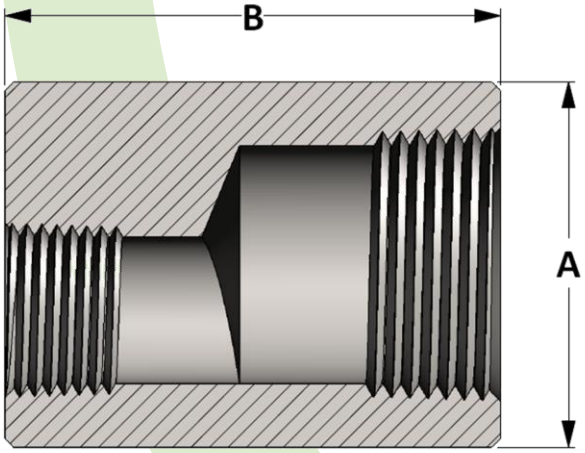

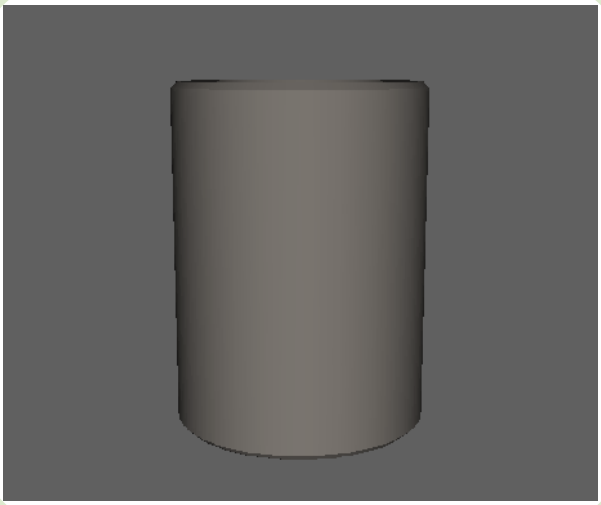

Active 3D Model

All dimensions are in inches • Weights are based on Carbon Steel

PIPE SIZE	CLASS 3000 – Figure No. 03024												
	1/8	1/4	3/8	1/2	3/4	1	1-1/4	1-1/2	2	2-1/2	3	3-1/2	4
A	---	0.750	0.875	1.125	1.375	1.750	2.250	2.500	3.000	3.625	4.250	4.750	5.500
B	---	1.375	1.500	1.875	2.000	2.375	2.625	3.125	3.375	3.625	4.250	4.500	4.750
LBS	---	0.12	0.18	0.39	0.61	1.22	2.20	3.22	4.69	7.62	11.44	14.91	21.85

PIPE SIZE	CLASS 6000 – Figure No. 06024												
	1/8	1/4	3/8	1/2	3/4	1	1-1/4	1-1/2	2	2-1/2	3	3-1/2	4
A	---	1.000	1.250	1.500	1.750	2.250	2.500	3.000	3.625	4.250	5.000	5.750	6.250
B	---	1.375	1.500	1.875	2.000	2.375	2.625	3.125	3.375	3.625	4.250	4.500	4.750
LBS	---	0.26	0.45	0.79	1.13	2.27	2.89	5.13	7.78	11.57	17.97	25.36	31.11

Socket Weld Cap

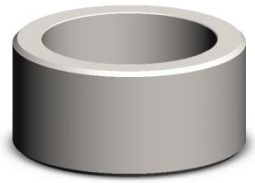

ISO 9001 & PED Certified
Canadian Registered in all provinces

Specification: ASME B16.11

Material: Available in a complete range of Carbon Steels, Stainless Steels, Alloy Steels and Non-ferrous metals certified to ASTM, ASME, and Military standards.

Sizes: 1/8”- 12” in CL 3000 • 1/8”- 6” in CL 6000 • 1/8”- 4” in CL 9000
Also available in tube sizes, special pipe schedules/class rating, orifice holes, and special lengths

Socket Weld Pressure Class	Pipe Schedule
Class 3000	S80/XH
Class 6000	S160
Class 9000	XXH

Welding Gap and Minimum Flat Dimension For Socket Weld Fittings

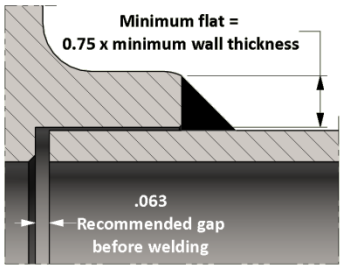

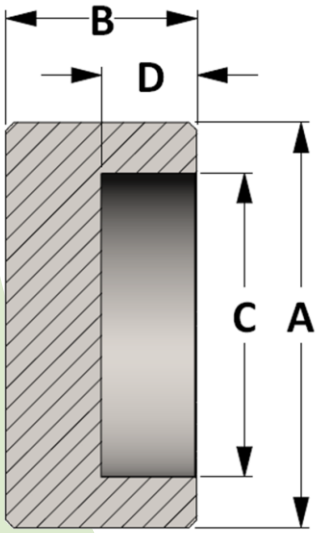

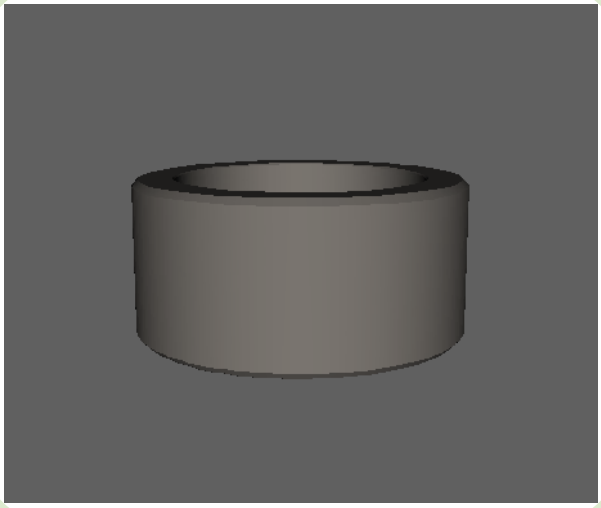

Active 3D Model

All dimensions are in inches • Weights are based on Carbon Steel

PIPE SIZE	CLASS 3000 – Figure No. 13010												
	1/8	1/4	3/8	1/2	3/4	1	1-1/4	1-1/2	2	2-1/2	3	3-1/2	4
A	0.750	0.875	1.063	1.250	1.500	1.813	2.250	2.500	3.000	3.625	4.313	5.000	5.500
B	0.688	0.688	0.688	0.813	0.938	1.063	1.063	1.125	1.313	1.438	1.625	1.875	1.875
C	0.426	0.560	0.693	0.859	1.071	1.335	1.682	1.922	2.410	2.910	3.536	4.036	4.545
D	0.438	0.438	0.438	0.438	0.531	0.531	0.531	0.531	0.656	0.656	0.656	0.781	0.781
LBS	0.05	0.09	0.13	0.34	0.35	0.52	1.01	1.13	2.03	2.79	4.43	7.54	7.86

PIPE SIZE	CLASS 6000 – Figure No. 16010												
	1/8	1/4	3/8	1/2	3/4	1	1-1/4	1-1/2	2	2-1/2	3	3-1/2	4
A	0.875	1.000	1.250	1.500	1.750	2.000	2.500	2.750	3.625	4.250	5.000	6.000	6.000
B	0.750	0.750	0.813	0.813	1.000	1.125	1.125	1.188	1.500	1.563	1.688	1.813	2.000
C	0.426	0.560	0.693	0.859	1.071	1.335	1.682	1.922	2.410	2.910	3.536	4.036	4.545
D	0.438	0.438	0.438	0.438	0.531	0.531	0.531	0.531	0.656	0.656	0.656	0.781	0.781
LBS	0.13	0.17	0.27	0.43	0.58	0.80	1.08	1.60	3.69	5.10	7.71	11.62	12.36

PIPE SIZE	CLASS 9000 – Figure No. 19010												
	1/8	1/4	3/8	1/2	3/4	1	1-1/4	1-1/2	2	2-1/2	3	3-1/2	4
A	1.000	1.250	1.750	1.750	2.000	2.500	2.750	3.000	3.625	4.500	5.500	6.000	6.500
B	0.813	0.875	0.938	1.063	1.188	1.250	1.250	1.375	1.563	1.750	2.000	2.125	2.125
C	0.426	0.560	0.693	0.859	1.071	1.335	1.682	1.922	2.410	2.910	3.536	4.036	4.545
D	0.438	0.438	0.438	0.438	0.531	0.531	0.531	0.531	0.656	0.656	0.656	0.781	0.781
LBS	0.16	0.27	0.40	0.74	0.90	1.55	1.80	2.35	3.85	10.96	11.57	14.11	16.30

Threaded Cap

ISO 9001 & PED Certified
Canadian Registered in all provinces

Specification: ASME B16.11

Material: Available in a complete range of Carbon Steels, Stainless Steels, Alloy Steels and Non-ferrous metals certified to ASTM, ASME, and Military standards.

Sizes: 1/8”- 12” in CL 3000 and 1/8”- 8”in CL 6000
Also available in 1/8 - 8” in 150 # and 1/8”- 4” in CL 9000

Threads: American National Standard Taper Pipe Threads NPT (ANSI/ASME B1.20.1-1983)
Also available in other thread forms: NPTF, NPSC, NPSM, NGT, SAE, BSPT, BSPP and in any combination.
Left hand threads available upon request.

Threaded Pressure Class	Pipe Schedule
Class 3000	S160
Class 6000	XXH

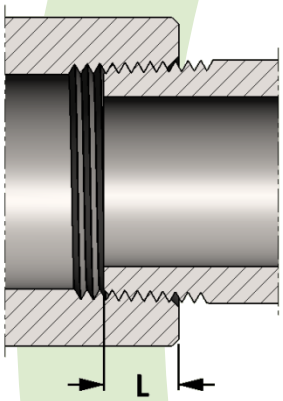

SIZE	L
1/8	0.273
1/4	0.395
3/8	0.407
1/2	0.534
3/4	0.553
1	0.661
1-1/4	0.681
1-1/2	0.681

SIZE	L
2	0.697
2-1/2	0.933
3	1.016
3-1/2	1.071
4	1.094
5	1.187
6	1.208
8	1.313

Length of thread screwed into fitting

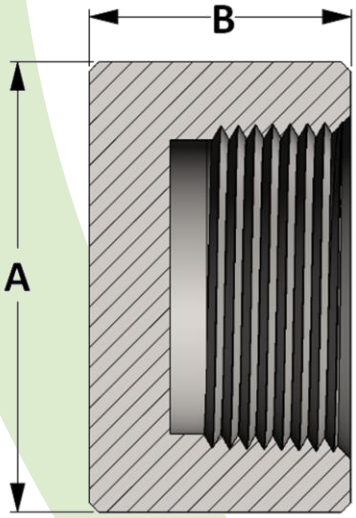

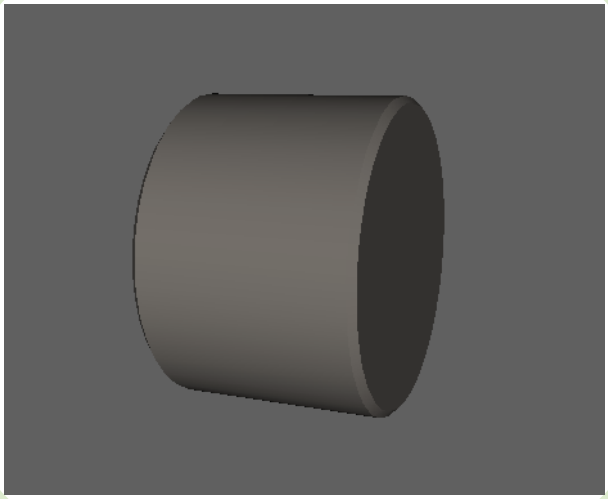

Active 3D Model

All dimensions are in inches • Weights are based on Carbon Steel

PIPE SIZE	CLASS 3000 – Figure No. 03010												
	1/8	1/4	3/8	1/2	3/4	1	1-1/4	1-1/2	2	2-1/2	3	3-1/2	4
A	0.625	0.750	0.875	1.125	1.375	1.750	2.250	2.500	3.000	3.625	4.250	4.750	5.500
B	0.750	1.000	1.000	1.250	1.438	1.625	1.750	1.750	1.875	2.375	2.563	2.625	2.687
LBS	0.50	0.08	0.11	0.23	0.38	0.70	1.28	1.58	2.25	4.22	6.38	7.09	11.13

PIPE SIZE	CLASS 6000 – Figure No. 06010												
	1/8	1/4	3/8	1/2	3/4	1	1-1/4	1-1/2	2	2-1/2	3	3-1/2	4
A	0.875	1.000	1.250	1.500	1.750	2.250	2.500	3.000	3.625	4.250	5.000	5.750	6.250
B	0.875	1.062	1.062	1.312	1.500	1.688	1.813	1.875	2.000	2.500	2.688	2.875	2.938
LBS	0.13	0.19	0.34	0.55	0.78	1.62	1.91	3.07	4.53	7.37	11.32	13.50	23.01

Socket Weld Plug

ISO 9001 & PED Certified
Canadian Registered in all provinces

Material: Available in a complete range of Carbon Steels, Stainless Steels, Alloy Steels and Non-ferrous metals certified to ASTM, ASME, and Military standards.

Sizes: 1/8”- 12” in CL 3000 • 1/8”- 6” in CL 6000 • 1/8”- 4” in CL 9000
Also available as Bull Plugs as per MSS-SP95 and in special lengths

Socket Weld Pressure Class	Pipe Schedule
Class 3000	S80/XH
Class 6000	S160
Class 9000	XXH

Welding Gap and Minimum Flat Dimension For Socket Weld Fittings

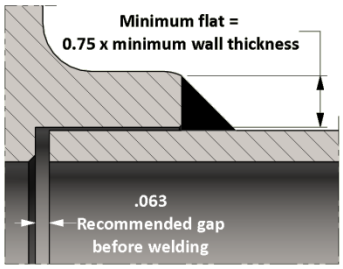

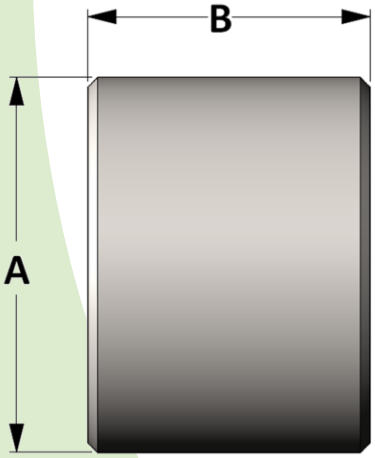

Active 3D Model

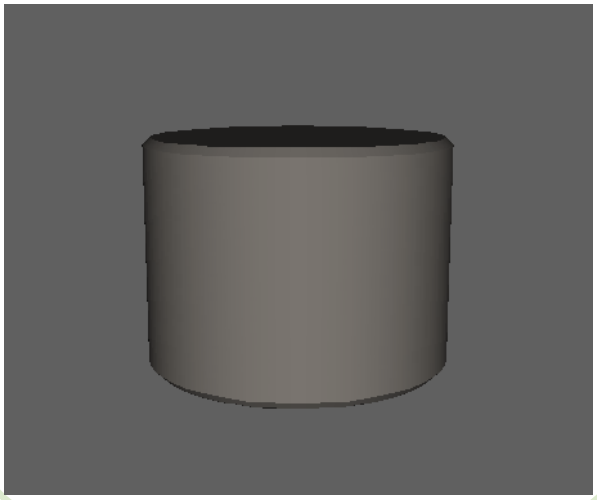

All dimensions are in inches • Weights are based on Carbon Steel

PIPE SIZE	CLASS 3000 – Figure No. 13021												
	1/8	1/4	3/8	1/2	3/4	1	1-1/4	1-1/2	2	2-1/2	3	3-1/2	4
A	0.405	0.540	0.675	0.840	1.05	1.315	1.660	1.900	2.375	2.875	3.500	4.000	4.500
B	1.125	1.125	1.125	1.125	1.125	1.125	1.250	1.313	1.500	2.125	2.125	2.500	3.000
LBS	0.04	0.07	0.11	0.18	0.27	0.43	0.76	1.04	1.87	3.89	5.76	3.46	13.44

PIPE SIZE	CLASS 6000 – Figure No. 16021												
	1/8	1/4	3/8	1/2	3/4	1	1-1/4	1-1/2	2	2-1/2	3	3-1/2	4
A	0.405	0.540	0.675	0.840	1.05	1.315	1.660	1.900	2.375	2.875	3.500	4.000	4.500
B	1.125	1.125	1.125	1.250	1.313	1.313	1.375	1.563	1.625	2.250	2.250	2.625	3.250
LBS	0.04	0.07	0.11	0.20	0.32	0.50	0.84	1.25	2.03	4.12	6.10	9.30	14.57

PIPE SIZE	CLASS 9000 – Figure No. 19021												
	1/8	1/4	3/8	1/2	3/4	1	1-1/4	1-1/2	2	2-1/2	3	3-1/2	4
A	0.405	0.540	0.675	0.840	1.05	1.315	1.660	1.900	2.375	2.875	3.500	4.000	4.500
B	1.250	1.250	1.250	1.250	1.375	1.500	1.750	1.875	2.000	2.625	2.625	3.000	3.625
LBS	0.04	0.08	0.13	0.20	0.34	0.57	1.07	1.50	2.50	4.870	7.10	10.62	16.24

ISO 9001 & PED Certified
Canadian Registered in all provinces

Round Head Plug

Specification: ASME B16.11 for 1/8" - 4" only

Material: Available in a complete range of Carbon Steels, Stainless Steels, Alloy Steels and Non-ferrous metals certified to ASTM, ASME, and Military standards.

Sizes: 1/8"- 8"
Also available as Bull Plugs as per MSS-SP95 and in special lengths

Threads: American National Standard Taper Pipe Threads NPT (ANSI/ASME B1.20.1-1983)
Also available in other thread forms: NPTF, NPSC, NPSM, BSPT, BSPP

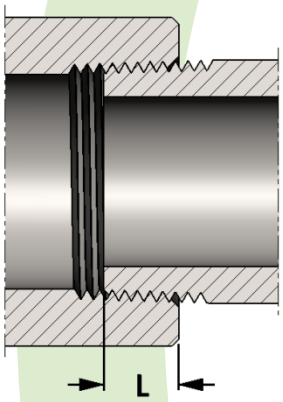

SIZE	L
1/8	0.273
1/4	0.395
3/8	0.407
1/2	0.534
3/4	0.553
1	0.661
1-1/4	0.681
1-1/2	0.681

SIZE	L
2	0.697
2-1/2	0.933
3	1.016
3-1/2	1.071
4	1.094
5	1.187
6	1.208
8	1.313

Length of thread screwed into fitting

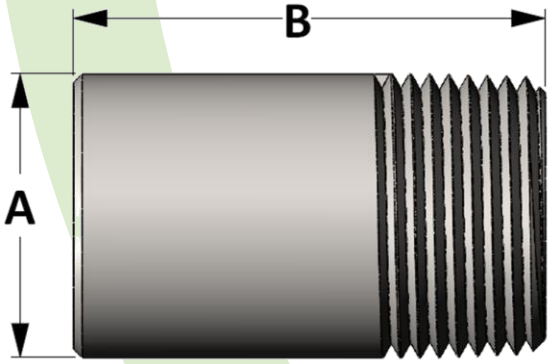

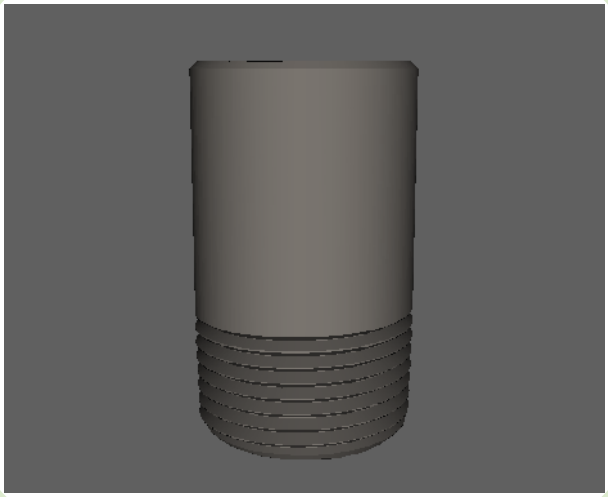

Active 3D Model

All dimensions are in inches • Weights are based in Carbon Steel

PIPE SIZE	Figure No. 06015														
	1/8	1/4	3/8	1/2	3/4	1	1-1/4	1-1/2	2	2-1/2	3	3-1/2	4	5	6
A	0.405	0.540	0.675	0.840	1.050	1.312	1.660	1.900	2.375	2.875	3.500	4.000	4.500	5.563	6.625
B	1.380	1.625	1.625	1.750	1.750	2.000	2.000	2.000	2.500	2.750	2.750	3.000	3.000	5.500	5.500
LBS	0.05	0.10	0.16	0.25	0.40	0.72	1.17	1.64	3.04	5.13	7.19	10.34	13.25	37.67	53.43

Bull Plug

ISO 9001 & PED Certified
Canadian Registered in all provinces

Specification: MSS-SP95

Material: Available in a complete range of Carbon Steels, Stainless Steels, Alloy Steels and Non-ferrous metals certified to ASTM, ASME, and Military standards.

Sizes: 1/8”- 8”
Also available as Hex

Threads: American National Standard Taper Pipe Threads
NPT (ANSI/ASME B1.20.1-1983)
Also available in other thread forms: NPTF, NPSC, NPSM, BSPT, BSPP

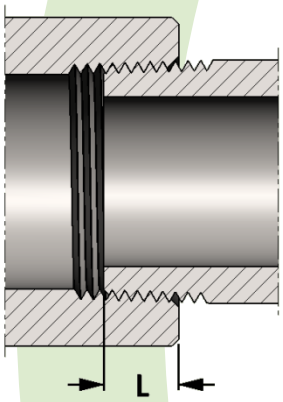

SIZE	L
1/8	0.273
1/4	0.395
3/8	0.407
1/2	0.534
3/4	0.553
1	0.661
1-1/4	0.681
1-1/2	0.681

SIZE	L
2	0.697
2-1/2	0.933
3	1.016
3-1/2	1.071
4	1.094
5	1.187
6	1.208
8	1.313

Length of thread screwed into fitting

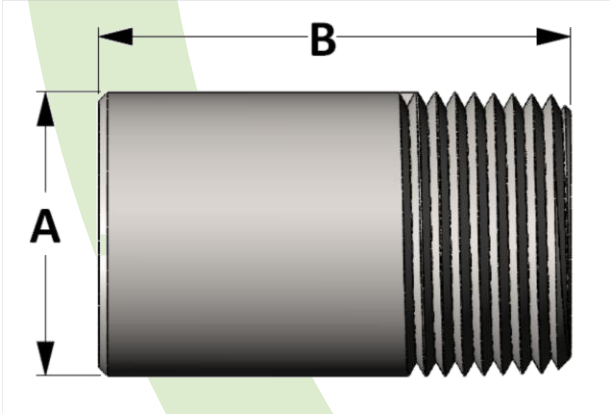

Active 3D Model

All dimensions are in inches • Weights are based in Carbon Steel

PIPE SIZE	Figure No. 06192														
	1/8	1/4	3/8	1/2	3/4	1	1-1/4	1-1/2	2	2-1/2	3	3-1/2	4	5	6
A	0.405	0.540	0.675	0.840	1.050	1.312	1.660	1.900	2.375	2.875	3.500	4.000	4.500	5.563	6.625
B	2.000	2.000	2.250	2.500	2.750	3.000	3.250	3.500	4.000	5.000	6.000	6.500	7.000	8.500	10.000
LBS	0.07	0.13	0.23	0.39	0.68	1.15	1.99	2.82	5.03	9.22	16.39	23.20	31.62	58.67	97.89

ISO 9001 & PED Certified
Canadian Registered in all provinces

Square Head Plug

Specification: ASME B16.11 for 1/8" - 4" only

Material: Available in a complete range of Carbon Steels, Stainless Steels, Alloy Steels and Non-ferrous metals certified to ASTM, ASME, and Military standards.

Sizes: 1/8"- 8"

Threads: American National Standard Taper Pipe Threads NPT (ANSI/ASME B1.20.1-1983)
Also available in other thread forms: NPTF, NPSC, NPSM, BSPT, BSPP

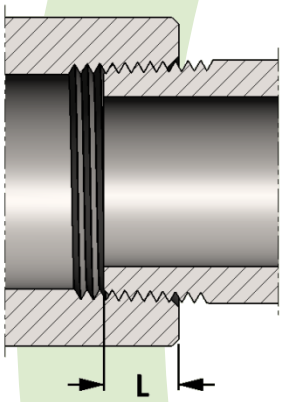

SIZE	L
1/8	0.273
1/4	0.395
3/8	0.407
1/2	0.534
3/4	0.553
1	0.661
1-1/4	0.681
1-1/2	0.681

SIZE	L
2	0.697
2-1/2	0.933
3	1.016
3-1/2	1.071
4	1.094
5	1.187
6	1.208
8	1.313

Length of thread screwed into fitting

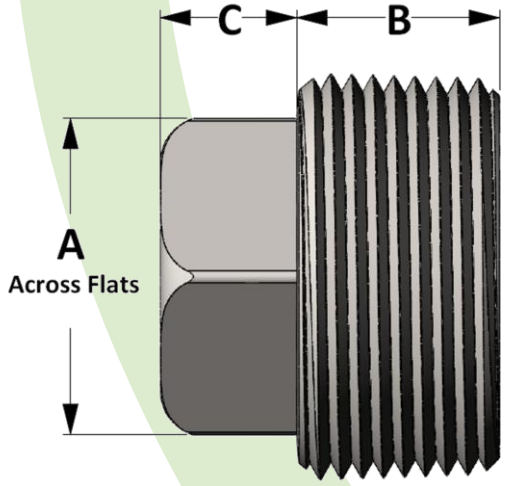

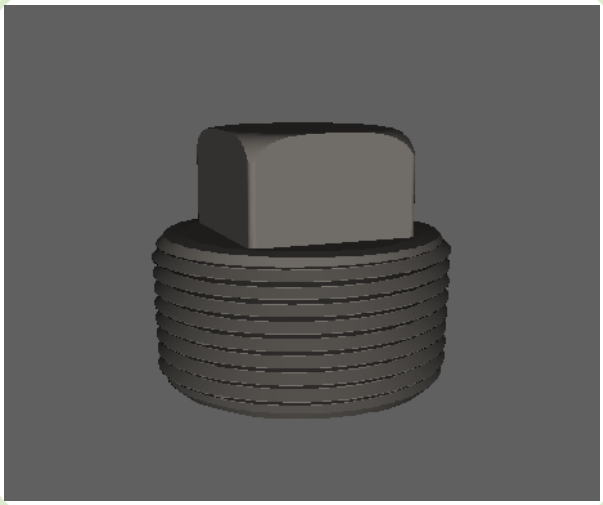

Active 3D Model

All dimensions are in inches • Weights are based in Carbon Steel

PIPE SIZE	Figure No. 06013														
	1/8	1/4	3/8	1/2	3/4	1	1-1/4	1-1/2	2	2-1/2	3	3-1/2	4	5	6
A	0.281	0.380	0.440	0.563	0.625	0.813	0.940	1.125	1.313	1.500	1.690	1.875	2.500	3.250	4.250
B	0.380	0.440	0.500	0.563	0.625	0.750	0.813	0.813	0.880	1.063	1.125	1.187	1.250	1.875	2.000
C	0.250	0.250	0.313	0.380	0.440	0.500	0.563	0.625	0.690	0.750	0.813	0.875	1.000	1.625	1.875
LBS	0.02	0.03	0.06	0.11	0.18	0.35	0.60	0.82	1.36	2.21	3.47	4.73	8.64	17.12	28.41

ISO 9001 & PED Certified
Canadian Registered in all provinces

Countersunk Head Plug

Specification: ASME B16.14 for 1/8" - 4" only

Material: Available in a complete range of Carbon Steels, Stainless Steels, Alloy Steels and Non-ferrous metals certified to ASTM, ASME, and Military standards.

Sizes: 1/8"- 8"

Threads: American National Standard Taper Pipe Threads NPT (ANSI/ASME B1.20.1-1983)
Also available in other thread forms: NPTF, NPSC, NPSM, BSPT, BSPP

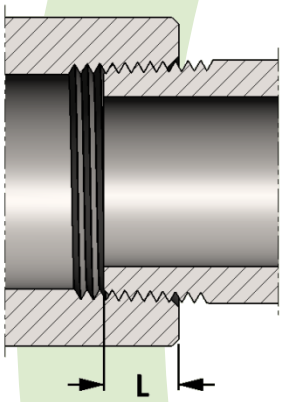

SIZE	L
1/8	0.273
1/4	0.395
3/8	0.407
1/2	0.534
3/4	0.553
1	0.661
1-1/4	0.681
1-1/2	0.681

SIZE	L
2	0.697
2-1/2	0.933
3	1.016
3-1/2	1.071
4	1.094
5	1.187
6	1.208
8	1.313

Length of thread screwed into fitting

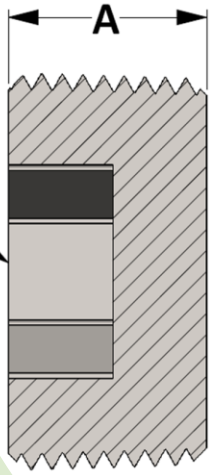

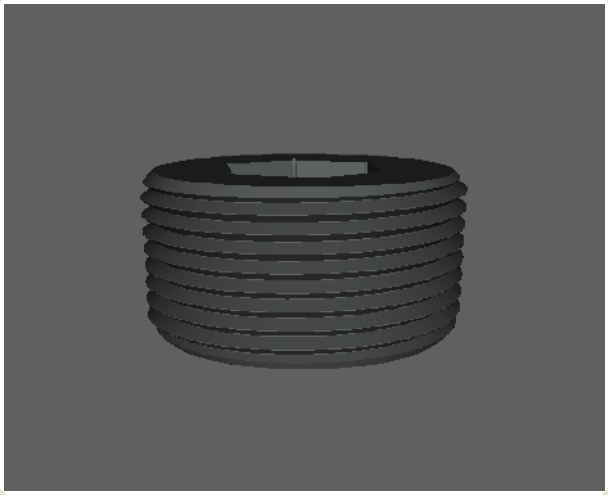

Active 3D Model

All dimensions are in inches • Weights are based in Carbon Steel

PIPE SIZE	Figure No. 06019 for Square Countersunk • Figure No. 06020 for Hexagon Countersunk													
	1/8	1/4	3/8	1/2	3/4	1	1-1/4	1-1/2	2	2-1/2	3	3-1/2	4	6
A	0.375	0.440	0.500	0.562	0.630	0.750	0.812	0.830	0.880	1.070	1.130	1.187	1.250	1.500
LBS	0.01	0.02	0.03	0.06	0.10	0.48	0.38	0.46	0.84	1.63	2.40	4.11	5.07	13.81

ISO 9001 & PED Certified
Canadian Registered in all provinces

Hexagon Head Plug

Specification: ASME B16.11 for 1/8" - 4" only

Material: Available in a complete range of Carbon Steels, Stainless Steels, Alloy Steels and Non-ferrous metals certified to ASTM, ASME, and Military standards.

Sizes: 1/8"- 8"
Also available in special lengths

Threads: American National Standard Taper Pipe Threads NPT (ANSI/ASME B1.20.1-1983)
Also available in other thread forms: NPTF, NPSC, NPSM, BSPT, BSPP

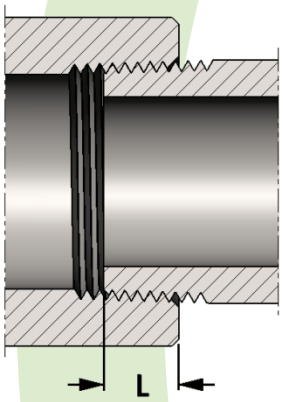

SIZE	L
1/8	0.273
1/4	0.395
3/8	0.407
1/2	0.534
3/4	0.553
1	0.661
1-1/4	0.681
1-1/2	0.681

SIZE	L
2	0.697
2-1/2	0.933
3	1.016
3-1/2	1.071
4	1.094
5	1.187
6	1.208
8	1.313

Length of thread screwed into fitting

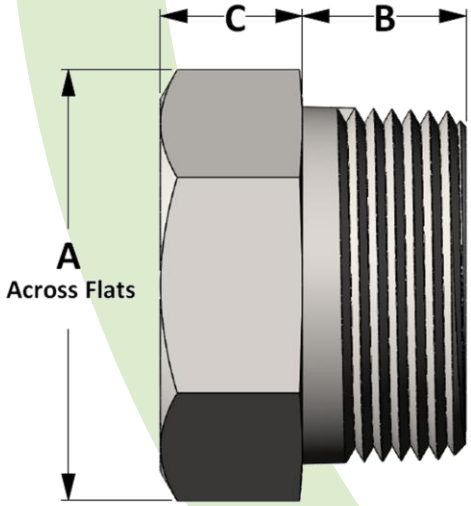

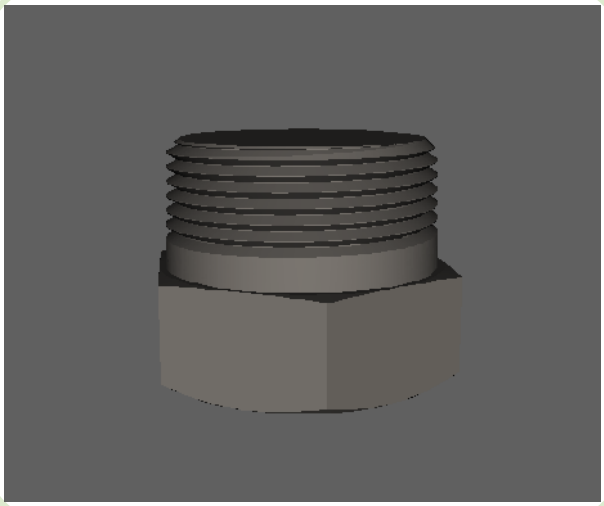

Active 3D Model

All dimensions are in inches • Weights are based in Carbon Steel

PIPE SIZE	Figure No. 06014														
	1/8	1/4	3/8	1/2	3/4	1	1-1/4	1-1/2	2	2-1/2	3	3-1/2	4	5	6
A	0.437	0.625	0.688	0.875	1.062	1.375	1.750	2.000	2.500	3.000	3.625	4.250	4.750	5.750	6.750
B	0.438	0.500	0.563	0.688	0.750	0.875	0.875	0.938	1.000	1.188	1.375	1.500	1.500	1.500	1.750
C	0.250	0.250	0.313	0.313	0.380	0.380	0.563	0.625	0.690	0.750	0.813	1.000	1.000	0.750	0.750
LBS	0.30	0.05	0.09	0.16	0.27	0.48	0.95	1.32	2.23	3.81	4.75	8.28	12.22	15.61	24.87

ISO 9001 & PED Certified
Canadian Registered in all provinces

Radiographic Plug and Boss

Specification: PFI Standard ES-16

Material: Available in a complete range of Carbon Steels, Stainless Steels, Alloy Steels and Non-ferrous metals certified to ASTM, ASME, and Military standards.

Boss type Access hole

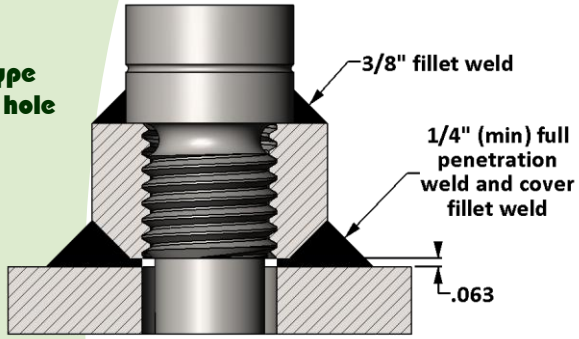

Integral type Access hole

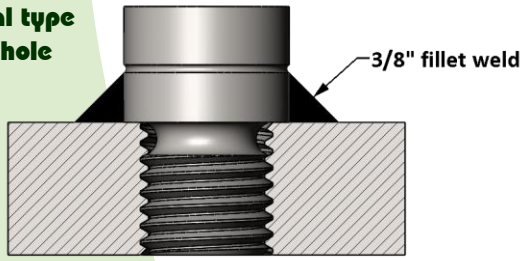

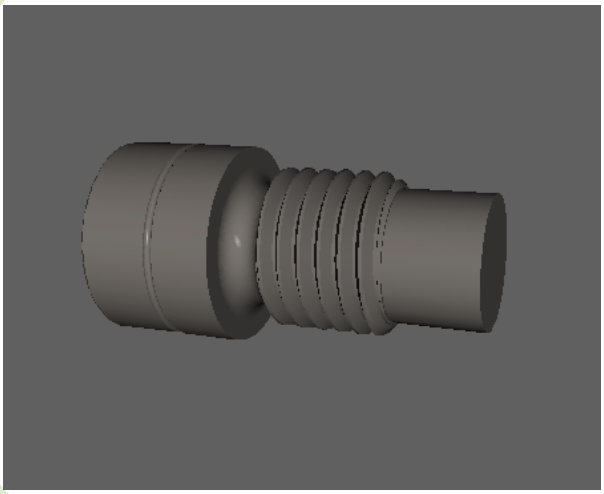

Active 3D Model

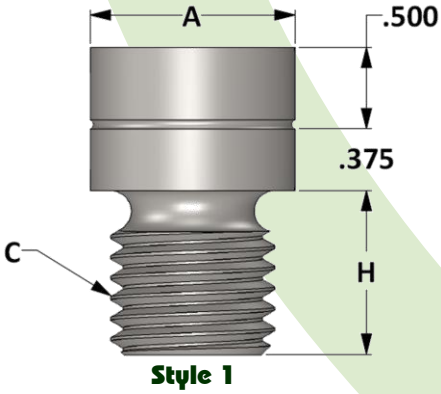

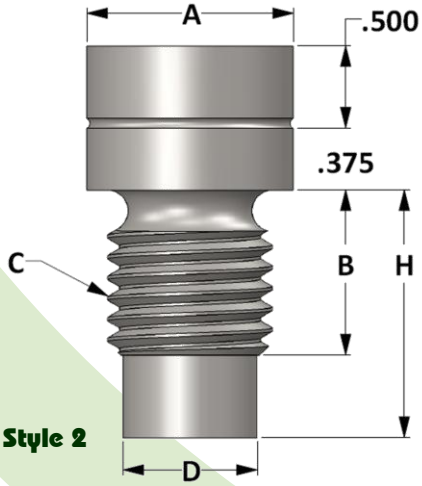

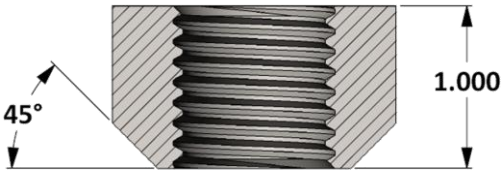

All dimensions are in inches

PIPE WALL THICKNESS	RADIOGRAPHIC PLUG – Figure No. 06186					
	< 5/8" without boss	<5/8" with boss	5/8" ≥ 1-3/8"	1-3/8" ≥ 3"	3" ≥ 5"	>5"
STYLE	1	2	1	2	2	2
A	1.250	1.250	1.250	1.250	1.750	2.250
B	---	1.000	---	1.250	1.500	2.000
C	1" – 8 UNC – 3A	1" – 8 UNC – 3A	1" – 8 UNC – 3A	1" – 8 UNC – 3A	1-1/2" – 6 UNC – 3A	2"– 4-1/2" UNC – 3A
D	---	0.812	---	0.812	1.234	1.656
H	0.625	Specified by user				

ISO 9001 & PED Certified
Canadian Registered in all provinces

Hexagon Head Bushing

Specification: ASME B16.11 for 1/8" - 4" only

Material: Available in a complete range of Carbon Steels, Stainless Steels, Alloy Steels and Non-ferrous metals certified to ASTM, ASME, and Military standards.

Sizes: 1/8"- 8"

Threads: American National Standard Taper Pipe Threads NPT (ANSI/ASME B1.20.1-1983)
Also available in other thread forms: NPTF, NPSC, NPSM, BSPT, BSPP
And in any combination

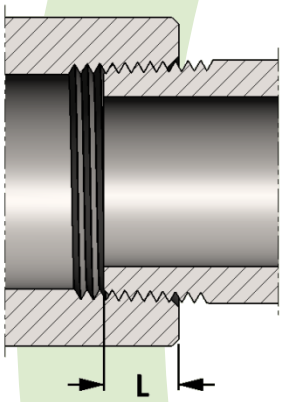

SIZE	L
1/8	0.273
1/4	0.395
3/8	0.407
1/2	0.534
3/4	0.553
1	0.661
1-1/4	0.681
1-1/2	0.681

SIZE	L
2	0.697
2-1/2	0.933
3	1.016
3-1/2	1.071
4	1.094
5	1.187
6	1.208
8	1.313

Length of thread screwed into fitting

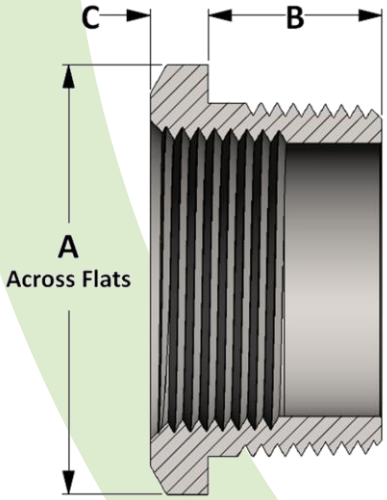

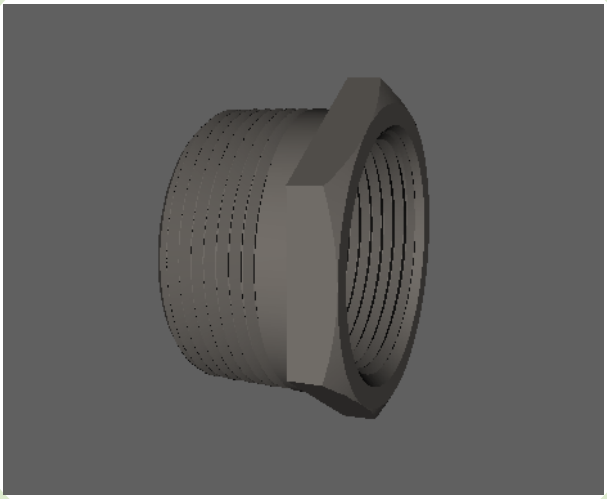

Active 3D Model

All dimensions are in inches • Weights are based in Carbon Steel

PIPE SIZE	Figure No. 06011														
	1/8	1/4	3/8	1/2	3/4	1	1-1/4	1-1/2	2	2-1/2	3	3-1/2	4	5	6
A	---	0.625	0.688	0.875	1.063	1.375	1.750	2.000	2.500	3.000	3.625	4.250	4.750	5.750	6.750
B	---	0.500	0.563	0.688	0.750	0.875	0.875	0.938	1.000	1.188	1.375	1.500	1.500	1.500	1.513
C	---	0.125	0.160	0.190	0.220	0.250	0.281	0.313	0.344	0.500	0.500	0.625	0.625	0.750	0.750
LBS	---	0.02	0.04	0.06	0.11	0.19	0.39	0.63	0.79	1.19	2.56	5.50	7.06	9.32	13.15

ISO 9001 & PED Certified
Canadian Registered in all provinces

Flush Bushing

Specification: ASME B16.11 for 1/8" - 4" only

Material: Available in a complete range of Carbon Steels, Stainless Steels, Alloy Steels and Non-ferrous metals certified to ASTM, ASME, and Military standards.

Sizes: 1/8"- 8"

Threads: American National Standard Taper Pipe Threads NPT (ANSI/ASME B1.20.1-1983)
Also available in other thread forms: NPTF, NPSC, NPSM, BSPT, BSPP
And in any combination

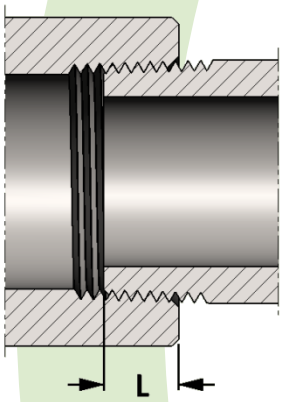

SIZE	L
1/8	0.273
1/4	0.395
3/8	0.407
1/2	0.534
3/4	0.553
1	0.661
1-1/4	0.681
1-1/2	0.681

SIZE	L
2	0.697
2-1/2	0.933
3	1.016
3-1/2	1.071
4	1.094
5	1.187
6	1.208
8	1.313

Length of thread screwed into fitting

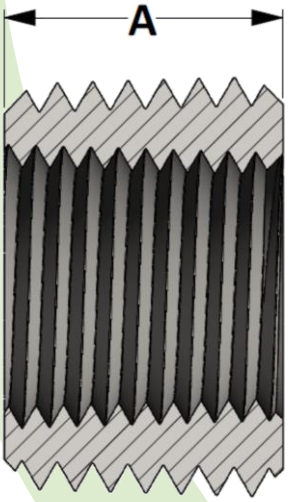

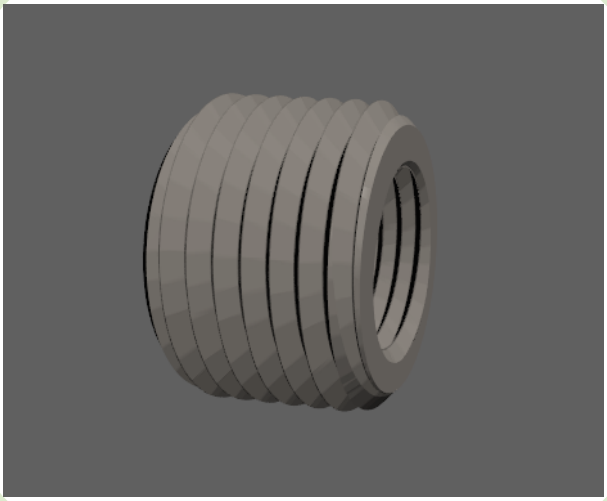

Active 3D Model

All dimensions are in inches • Weights are based in Carbon Steel

PIPE SIZE	Figure No. 06012														
	1/8	1/4	3/8	1/2	3/4	1	1-1/4	1-1/2	2	2-1/2	3	3-1/2	4	5	6
A	---	0.438	0.500	0.563	0.625	0.750	0.813	0.813	0.875	1.063	1.125	1.188	1.250	1.250	1.375
LBS	---	0.01	0.02	0.03	0.05	0.09	0.17	0.31	0.37	0.52	0.90	0.92	2.125	2.41	4.60

Socket Weld Union

ISO 9001 & PED Certified
Canadian Registered in all provinces

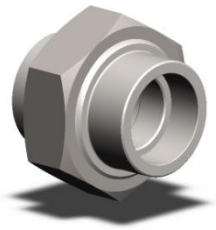

Specification: MSS-SP83 for 1/8”-3” Class 3000 and 1/8" - 2-1/2" Class 6000

Material: Available in a complete range of Carbon Steels, Stainless Steels, Alloy Steels and Non-ferrous metals certified to ASTM, ASME, and Military standards.

Sizes: 1/8”- 4” in CL 3000•1/8”- 3” in CL 6000• 1/8”- 2-1/2” in CL 9000
Also available in reducing pipe sizes and tube sizes

Socket Weld Pressure Class	Pipe Schedule
Class 3000	S80/XH
Class 6000	S160
Class 9000	XXH

Welding Gap and Minimum Flat Dimension For Socket Weld Fittings

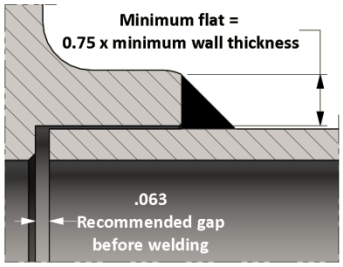

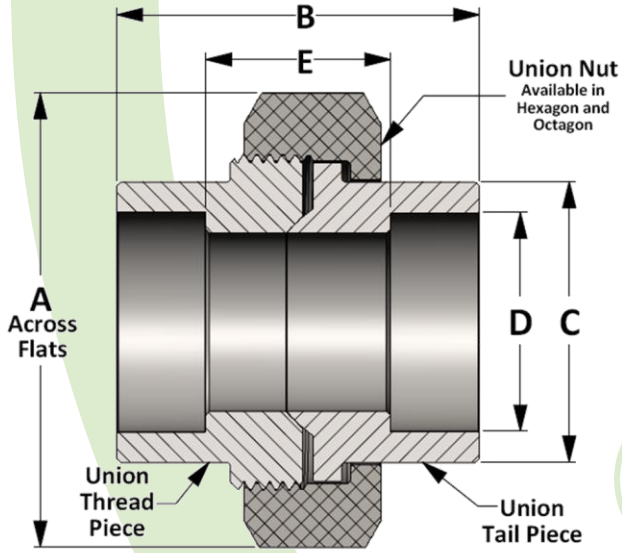

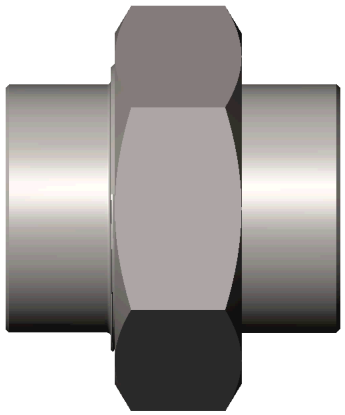

Animated Model

All dimensions are in inches • Weights are based in Carbon Steel

CLASS 3000 – FIGURE NO. 13017												
PIPE SIZE	1/8	1/4	3/8	1/2	3/4	1	1-1/4	1-1/2	2	2-1/2	3	4
A	1.375	1.375	1.625	1.813	2.250	2.562	3.063	3.438	4.063	4.875	5.688	6.875
B	1.688	1.688	1.813	1.938	2.250	2.438	2.813	3.000	3.375	4.031	4.313	8.000
C	0.865	0.865	1.025	1.235	1.465	1.795	2.165	2.425	2.965	3.615	4.305	5.415
D	0.426	0.560	0.693	0.859	1.071	1.335	1.682	1.922	2.410	2.910	3.536	4.545
E	0.813	0.813	0.938	0.938	1.125	1.188	1.438	1.500	1.625	2.250	2.313	5.000
LBS	0.40	0.38	0.52	0.73	1.19	1.66	2.66	3.42	5.36	9.12	12.58	17.50

CLASS 6000 – FIGURE NO. 16017												
PIPE SIZE	1/8	1/4	3/8	1/2	3/4	1	1-1/4	1-1/2	2	2-1/2	3	4
A	1.375	1.625	1.813	2.250	2.562	3.063	3.438	4.063	4.875	5.688	6.875	---
B	1.688	1.813	1.938	2.250	2.438	2.813	3.000	3.375	4.031	4.313	8.000	---
C	0.865	1.025	1.235	1.465	1.795	2.165	2.425	2.965	3.615	4.305	5.415	---
D	0.426	0.560	0.693	0.859	1.071	1.335	1.682	1.922	2.410	2.910	3.536	---
E	0.813	0.813	0.938	0.938	1.125	1.188	1.438	1.500	1.625	2.250	5.750	---
LBS	0.48	0.56	0.75	1.35	2.01	3.17	3.92	6.60	10.12	14.00	40.891	---

CLASS 9000 – FIGURE NO. 19017												
PIPE SIZE	1/8	1/4	3/8	1/2	3/4	1	1-1/4	1-1/2	2	2-1/2	3	4
A	1.750	2.000	2.250	2.563	3.063	3.688	4.313	5.000	5.750	6.875	---	---
B	2.500	2.563	2.938	3.250	3.750	4.000	4.625	4.813	5.563	6.25	---	---
C	1.000	1.250	1.500	1.750	2.250	2.500	3.000	3.625	4.250	5.000	---	---
D	0.426	0.560	0.693	0.859	1.071	1.335	1.682	1.922	2.410	2.910	---	---
E	1.720	1.688	1.938	2.000	2.375	2.375	3.000	2.938	3.188	3.750	---	---
LBS	0.89	1.045	1.955	3.29	5.34	7.99	12.73	18.34	26.36	37.07	---	---

Threaded Union

ISO 9001 & PED Certified
Canadian Registered in all provinces

Specification: MSS-SP83 for 1/8”-3” Class 3000 and 1/8" - 2-1/2" Class 6000

Material: Available in a complete range of Carbon Steels, Stainless Steels, Alloy Steels and Non-ferrous metals certified to ASTM, ASME, and Military standards.

Sizes: 1/8”- 4” in CL 3000 • 1/8”- 3”in CL 6000 • 1/8”- 2-1/2” in CL 9000

Threads: American National Standard Taper Pipe Threads NPT (ANSI/ASME B1.20.1-1983)
Also available in other thread forms: NPTF, NPSC, NPSM, NGT, SAE, BSPT, BSPP and in any combination.
Left hand threads available upon request.

Threaded Pressure Class	Pipe Schedule
Class 2000	S80/XH
Class 3000	S160
Class 6000	XXH

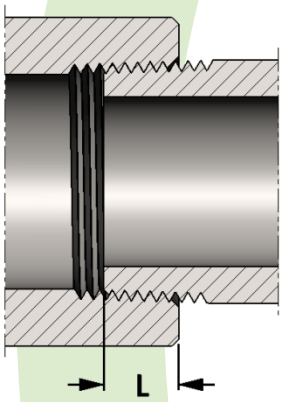

SIZE	L	SIZE	L
1/8	0.273	2	0.697
1/4	0.395	2-1/2	0.933
3/8	0.407	3	1.016
1/2	0.534	3-1/2	1.071
3/4	0.553	4	1.094
1	0.661	5	1.187
1-1/4	0.681	6	1.208
1-1/2	0.681	8	1.313

Length of thread screwed into fitting

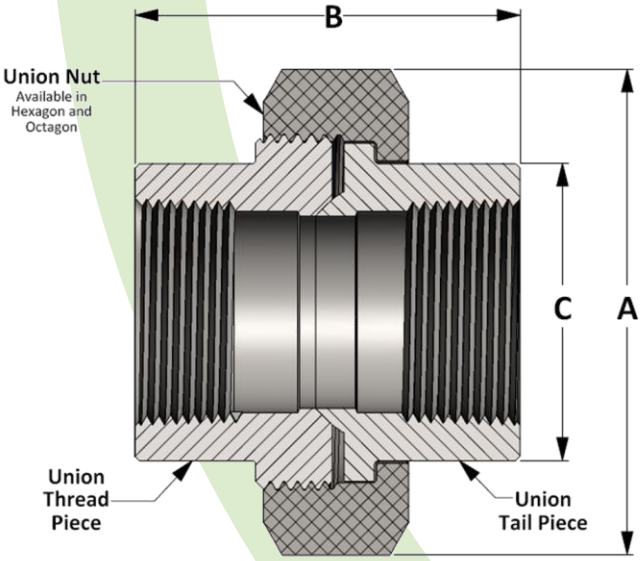

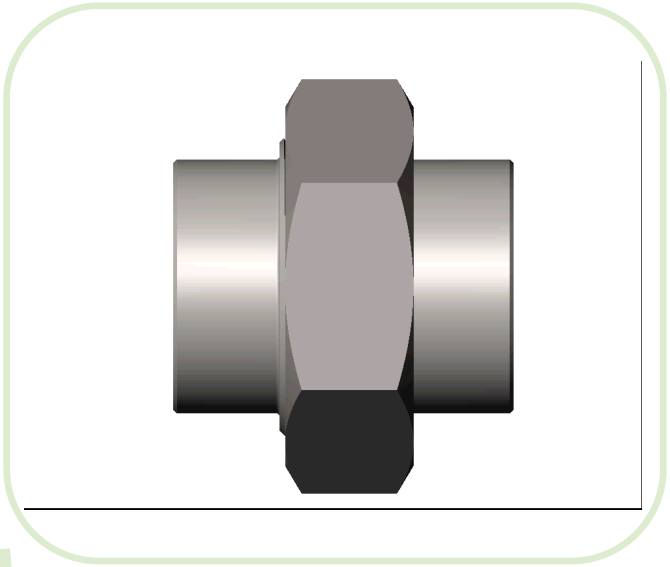

Animated Model

All dimensions are in inches • Weights are based on Carbon Steel

PIPE SIZE	CLASS 3000 – Figure No. 03017												
	1/8	1/4	3/8	1/2	3/4	1	1-1/4	1-1/2	2	2-1/2	3	3-1/2	4
A	1.375	1.375	1.625	1.813	2.25	2.563	3.063	3.438	4.063	4.875	5.688	6.875	6.875
B	1.625	1.625	1.750	2.000	2.313	2.500	2.813	3.000	3.438	4.000	4.375	8.000	8.000
C	0.865	0.865	1.025	1.235	1.465	1.795	2.165	2.425	2.965	3.615	4.305	5.415	5.415
LBS	0.45	0.40	0.65	0.77	1.19	1.73	2.74	3.60	5.51	8.90	12.61	36.92	17.50

PIPE SIZE	CLASS 6000 – Figure No. 06017												
	1/8	1/4	3/8	1/2	3/4	1	1-1/4	1-1/2	2	2-1/2	3	3-1/2	4
A	1.375	1.625	1.813	2.25	2.563	3.063	3.438	4.063	4.875	5.688	6.875	---	---
B	1.625	1.750	2.000	2.313	2.500	2.813	3.000	3.438	4.000	4.375	8.000	---	---
C	0.865	1.025	1.235	1.465	1.795	2.165	2.425	2.965	3.615	4.305	5.415	---	---
LBS	0.48	0.56	0.75	1.35	2.01	3.17	3.92	6.60	10.12	14.00	41.16	---	---

PIPE SIZE	CLASS 9000 – Figure No. 09017												
	1/8	1/4	3/8	1/2	3/4	1	1-1/4	1-1/2	2	2-1/2	3	3-1/2	4
A	1.625	1.813	2.25	2.563	3.063	3.438	4.063	4.875	5.688	6.875	---	---	---
B	2.500	2.563	3.000	3.156	3.625	4.000	4.500	4.875	6.000	6.313	---	---	---
C	1.000	1.250	1.500	1.750	2.250	2.500	3.000	3.625	4.250	5.000	---	---	---
LBS	1.18	1.67	1.95	3.12	5.61	8.08	13.23	18.34	28.21	45.86	---	---	---

Penn MACHINE Since 1931

ISO 9001 & PED Certified
Canadian Registered in all provinces

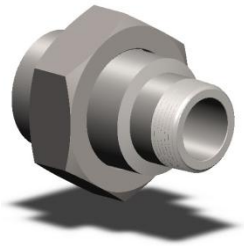

Male x Female Threaded Union

Material: Available in a complete range of Carbon Steels, Stainless Steels, Alloy Steels and Non-ferrous metals certified to ASTM, ASME, and Military standards.

Sizes: 1/8”- 4” in CL 3000 • 1/8”- 3”in CL 6000 • 1/8”- 2-1/2” in CL 9000

Threads: American National Standard Taper Pipe Threads NPT (ANSI/ASME B1.20.1-1983)
Also available in other thread forms: NPTF, NPSC, NPSM, NGT, SAE, BSPT, BSPP and in any combination.
Left hand threads available upon request.

Threaded Pressure Class	Pipe Schedule
Class 2000	S80/XH
Class 3000	S160
Class 6000	XXH

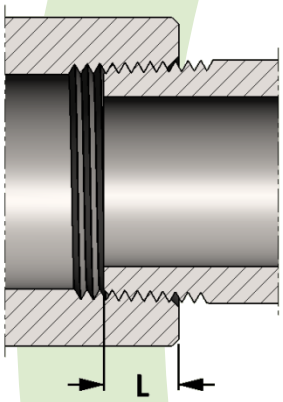

SIZE	L	SIZE	L
1/8	0.273	2	0.697
1/4	0.395	2-1/2	0.933
3/8	0.407	3	1.016
1/2	0.534	3-1/2	1.071
3/4	0.553	4	1.094
1	0.661	5	1.187
1-1/4	0.681	6	1.208
1-1/2	0.681	8	1.313

Length of thread screwed into fitting

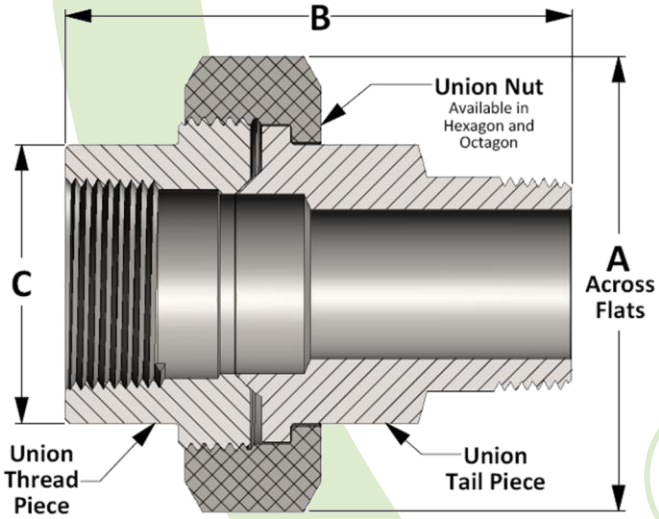

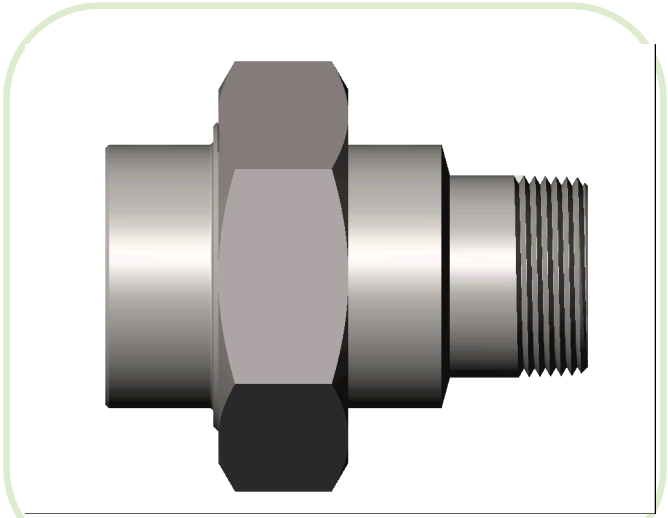

Animated Model

All dimensions are in inches • Weights are based on Carbon Steel

PIPE SIZE	CLASS 3000 – Figure No. 03032												
	1/8	1/4	3/8	1/2	3/4	1	1-1/4	1-1/2	2	2-1/2	3	3-1/2	4
A	1.375	1.375	1.625	1.813	2.25	2.563	3.063	3.438	4.063	4.875	5.688	6.875	6.875
B	2.500	2.500	2.719	3.000	3.438	3.750	4.125	4.313	4.875	5.375	5.813	9.406	9.406
C	0.865	0.865	1.025	1.235	1.465	1.795	2.165	2.425	2.965	3.615	4.305	5.415	5.415
LBS	0.41	0.45	0.61	0.88	1.47	2.11	3.10	4.19	6.78	10.81	15.02	30.54	34.19

PIPE SIZE	CLASS 6000 – Figure No. 06032												
	1/8	1/4	3/8	1/2	3/4	1	1-1/4	1-1/2	2	2-1/2	3	3-1/2	4
A	1.375	1.625	1.813	2.25	2.563	3.063	3.438	4.063	4.875	5.688	6.875	---	---
B	2.500	2.719	3.000	3.438	3.750	4.125	4.313	4.875	5.375	5.813	9.406	---	---
C	0.865	1.025	1.235	1.465	1.795	2.165	2.425	2.965	3.615	4.305	5.415	---	---
LBS	0.44	0.71	1.02	1.60	2.45	3.70	4.77	7.99	15.44	19.63	46.96	---	---

PIPE SIZE	CLASS 9000 – Figure No. 09032												
	1/8	1/4	3/8	1/2	3/4	1	1-1/4	1-1/2	2	2-1/2	3	3-1/2	4
A	1.625	1.813	2.25	2.563	3.063	3.438	4.063	4.875	5.688	6.875	---	---	---
B	2.719	3.000	3.438	3.750	4.125	4.313	4.875	5.375	5.813	9.406	---	---	---
C	1.000	1.250	1.500	1.750	2.250	2.500	3.000	3.625	4.250	5.000	---	---	---
LBS	0.83	1.23	1.77	2.90	4.72	6.36	10.60	16.25	23.99	46.78	---	---	---

ISO 9001 & PED Certified
Canadian Registered in all provinces

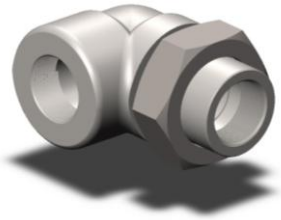

Threaded Union 90° Elbow

Material: Available in a complete range of Carbon Steels, Stainless Steels, Alloy Steels and Non-ferrous metals certified to ASTM, ASME, and Military standards.

Sizes: 1/8”- 3” in CL 3000
Also available in CL 2000, CL 6000, CL 9000 and CL 10,000 and in reducing pipe sizes.

Threads: American National Standard Taper Pipe Threads NPT (ANSI/ASME B1.20.1-1983)
Also available in other thread forms: NPTF, NPSC, NPSM, NGT, SAE, BSPT, BSPP and in any combination.
Left hand threads available upon request.

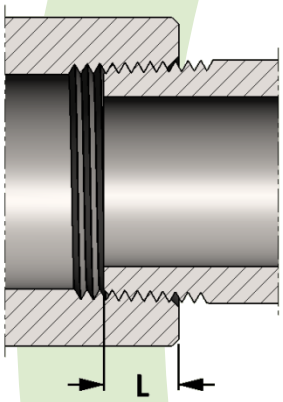

SIZE	L
1/8	0.273
1/4	0.395
3/8	0.407
1/2	0.534
3/4	0.553
1	0.661
1-1/4	0.681
1-1/2	0.681

SIZE	L
2	0.697
2-1/2	0.933
3	1.016
3-1/2	1.071
4	1.094
5	1.187
6	1.208
8	1.313

Length of thread screwed into fitting

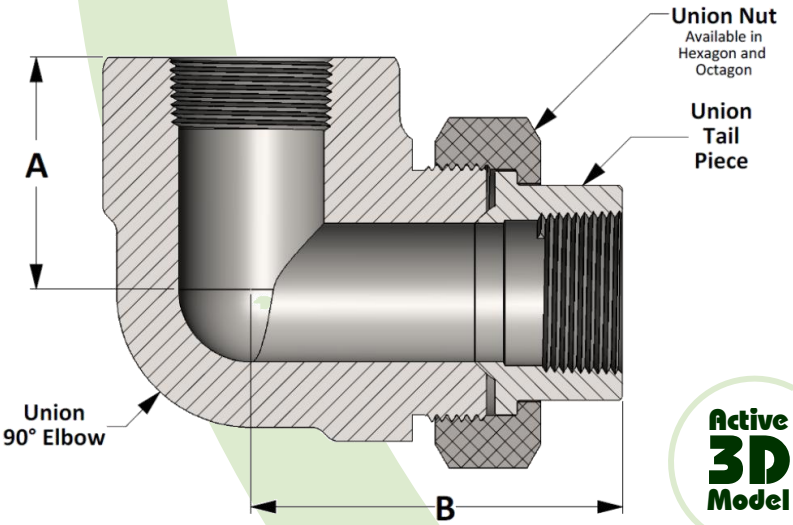

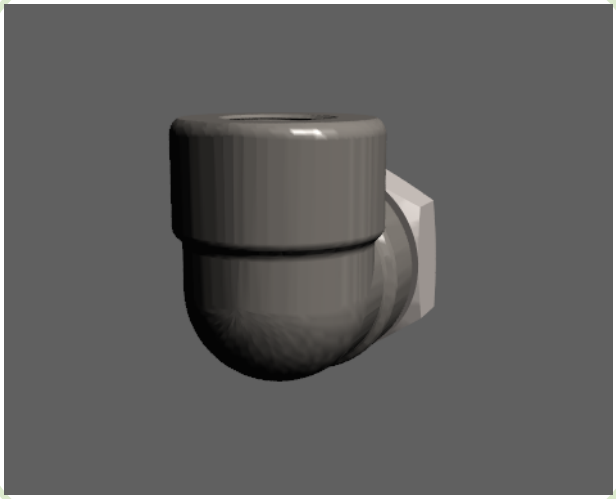

Active 3D Model

All dimensions are in inches • Weights are based on Carbon Steel

PIPE SIZE	Class 3000 - Figure No. 03059										
	1/8	1/4	3/8	1/2	3/4	1	1-1/4	1-1/2	2	2-1/2	3
A	1.125	1.125	1.125	1.313	1.500	1.750	2.375	2.375	3.000	3.750	4.188
B	1.938	1.938	2.031	2.281	2.563	2.969	3.813	3.813	4.750	5.866	6.406
LBS	0.96	0.94	0.98	1.30	1.90	3.00	3.88	6.63	8.13	22.50	27.20

ISO 9001 & PED Certified
Canadian Registered in all provinces

Male x Female Union 90° Elbow

Material: Available in a complete range of Carbon Steels, Stainless Steels, Alloy Steels and Non-ferrous metals certified to ASTM, ASME, and Military standards.

Sizes: 1/8”- 3” in CL 3000
Also available in CL 2000, CL 6000, CL 9000 and CL 10,000 and in reducing pipe sizes.

Threads: American National Standard Taper Pipe Threads NPT (ANSI/ASME B1.20.1-1983)
Also available in other thread forms: NPTF, NPSC, NPSM, NGT, SAE, BSPT, BSPP and in any combination.
Left hand threads available upon request.

Also available in Socket Weld
and in a combination of Threaded and Socket Weld

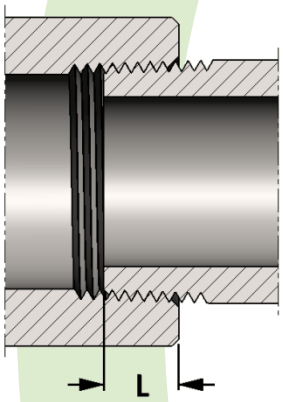

SIZE	L
1/8	0.273
1/4	0.395
3/8	0.407
1/2	0.534
3/4	0.553
1	0.661
1-1/4	0.681
1-1/2	0.681

SIZE	L
2	0.697
2-1/2	0.933
3	1.016
3-1/2	1.071
4	1.094
5	1.187
6	1.208
8	1.313

Length of thread screwed into fitting

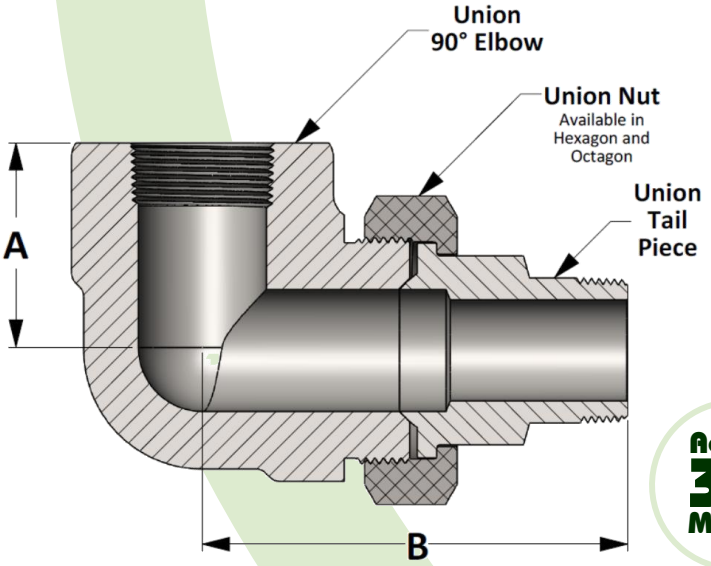

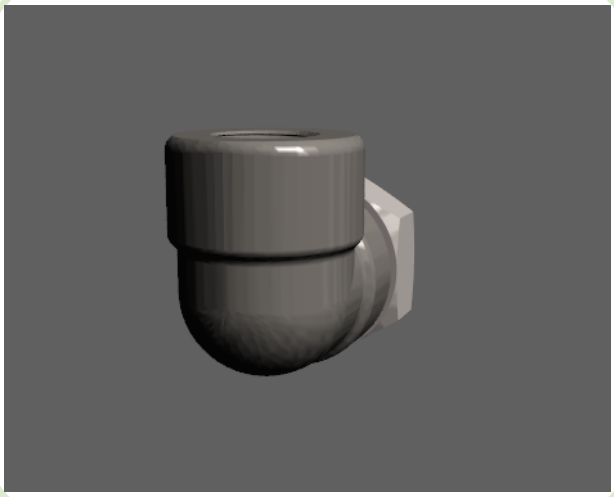

Active 3D Model

All dimensions are in inches • Weights are based on Carbon Steel

PIPE SIZE	Class 3000 - Figure No. 03058										
	1/8	1/4	3/8	1/2	3/4	1	1-1/4	1-1/2	2	2-1/2	3
A	1.125	1.125	1.125	1.313	1.500	1.750	2.375	2.375	3.000	3.750	4.188
B	2.625	2.625	2.875	3.218	3.563	4.093	4.875	4.968	6.000	6.688	7.843
LBS	0.96	0.94	0.98	1.30	1.90	3.00	3.88	6.63	8.13	22.50	27.20

ISO 9001 & PED Certified
Canadian Registered in all provinces

Male x Female Union Tee

Material: Available in a complete range of Carbon Steels, Stainless Steels, Alloy Steels and Non-ferrous metals certified to ASTM, ASME, and Military standards.

Sizes: 1/8”- 3” in CL 3000
Also available in CL 2000, CL 6000, CL 9000 and CL 10,000 and in reducing pipe sizes.

Threads: American National Standard Taper Pipe Threads NPT (ANSI/ASME B1.20.1-1983)
Also available in other thread forms: NPTF, NPSC, NPSM, NGT, SAE, BSPT, BSPP and in any combination.
Left hand threads available upon request.

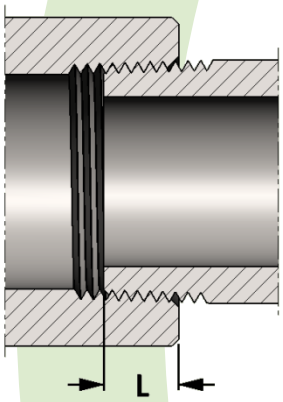

SIZE	L
1/8	0.273
1/4	0.395
3/8	0.407
1/2	0.534
3/4	0.553
1	0.661
1-1/4	0.681
1-1/2	0.681

SIZE	L
2	0.697
2-1/2	0.933
3	1.016
3-1/2	1.071
4	1.094
5	1.187
6	1.208
8	1.313

Length of thread screwed into fitting

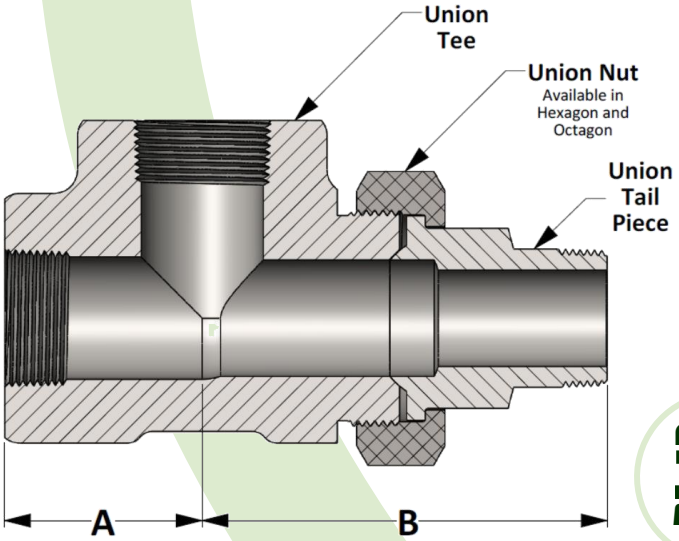

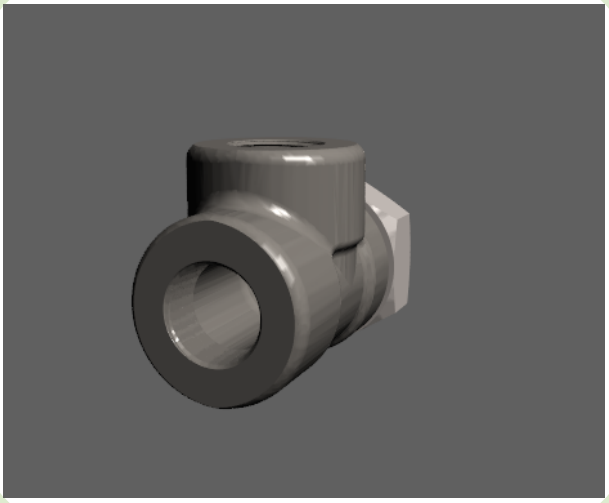

Active 3D Model

All dimensions are in inches • Weights are based on Carbon Steel

PIPE SIZE	Class 3000 – Figure No. 03078										
	1/8	1/4	3/8	1/2	3/4	1	1-1/4	1-1/2	2	2-1/2	3
A	1.125	1.125	1.125	1.313	1.500	1.750	2.375	2.375	3.000	3.750	4.188
B	2.625	2.625	2.875	3.218	3.563	4.093	4.875	4.969	6.000	6.688	7.843
LBS	1.15	1.13	1.18	1.56	2.28	3.60	4.66	7.90	9.20	27.30	32.30

ISO 9001 & PED Certified
Canadian Registered in all provinces

Threaded Union Tee

Material: Available in a complete range of Carbon Steels, Stainless Steels, Alloy Steels and Non-ferrous metals certified to ASTM, ASME, and Military standards.

Sizes: 1/8”- 3” in CL 3000
Also available in CL 2000, CL 6000, CL 9000 and CL 10,000 and in reducing pipe sizes.

Threads: American National Standard Taper Pipe Threads NPT (ANSI/ASME B1.20.1-1983)
Also available in other thread forms: NPTF, NPSC, NPSM, NGT, SAE, BSPT, BSPP and in any combination.
Left hand threads available upon request.

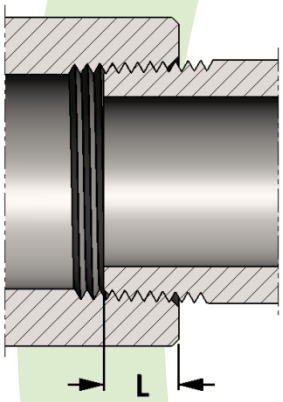

SIZE	L
1/8	0.273
1/4	0.395
3/8	0.407
1/2	0.534
3/4	0.553
1	0.661
1-1/4	0.681
1-1/2	0.681

SIZE	L
2	0.697
2-1/2	0.933
3	1.016
3-1/2	1.071
4	1.094
5	1.187
6	1.208
8	1.313

Length of thread screwed into fitting

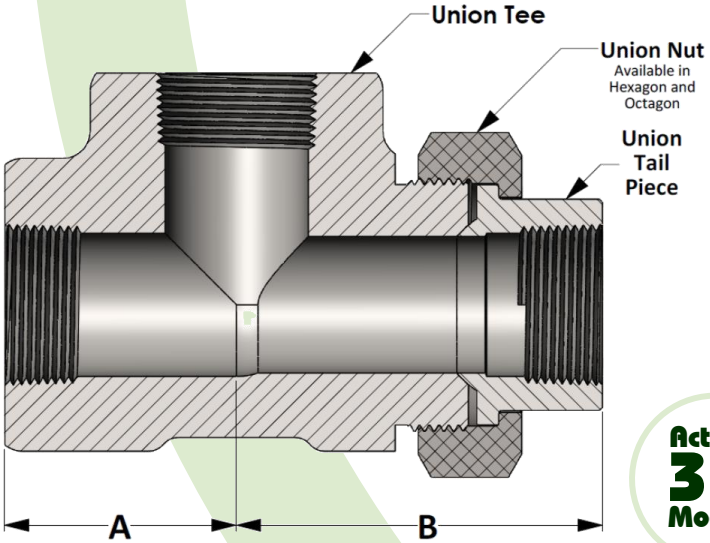

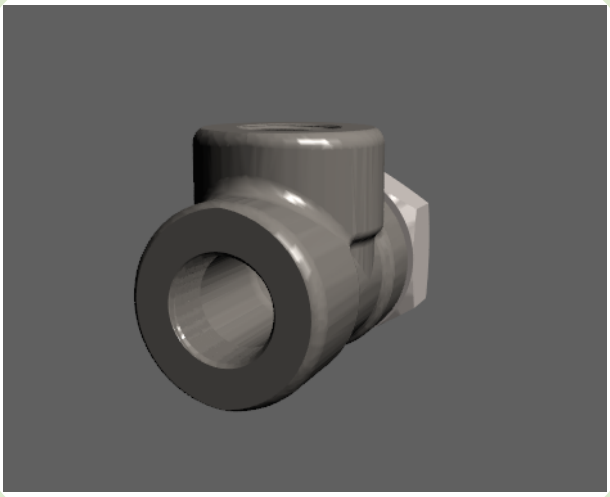

Active 3D Model

All dimensions are in inches • Weights are based on Carbon Steel

PIPE SIZE	Class 3000 – Figure No. 03078										
	1/8	1/4	3/8	1/2	3/4	1	1-1/4	1-1/2	2	2-1/2	3
A	1.125	1.125	1.125	1.313	1.500	1.750	2.375	2.375	3.000	3.750	4.188
B	1.938	1.938	2.031	2.281	2.563	2.969	3.813	3.813	4.750	5.866	6.406
LBS	1.15	1.13	1.18	1.56	2.28	3.60	4.66	7.90	9.20	27.30	32.30

ISO 9001 & PED Certified
Canadian Registered in all provinces

Socket Weld O-Ring Union

Specification: O-Ring groove per AS 568 B

Material: Available in a complete range of Carbon Steels, Stainless Steels, Alloy Steels and Non-ferrous metals certified to ASTM, ASME, and Military standards.

O-Ring Material: Available in Buna, Viton, or Teflon. Durometer hardness corresponds to pressure class.

Sizes: 1/8"- 3" in CL 3000 • 1/8"- 2-1/2" in CL 6000
Also available in reducing pipe sizes and tube sizes

Socket Weld Pressure Class	Pipe Schedule
Class 3000	S80/XH
Class 6000	S160

Welding Gap and Minimum Flat Dimension For Socket Weld Fittings

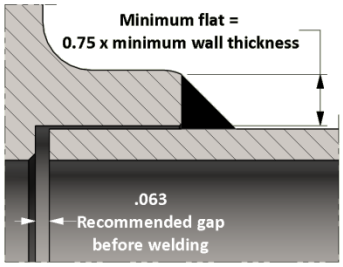

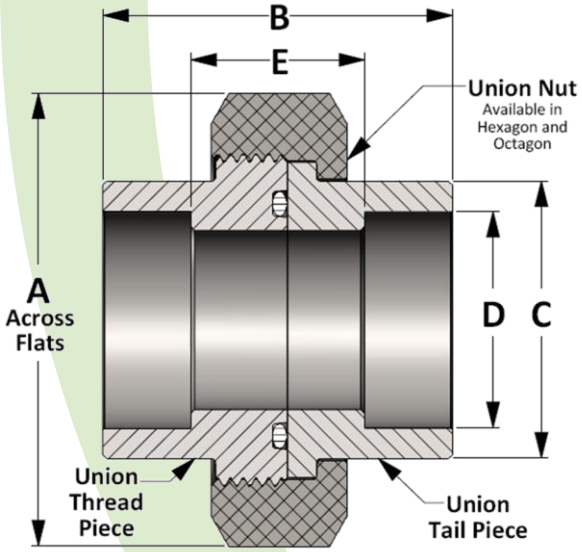

Animated Model

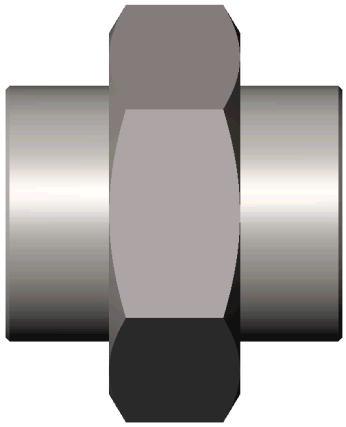

All dimensions are in inches • Weights are based in Carbon Steel

CLASS 3000 – FIGURE NO. 13035											
PIPE SIZE	1/8	1/4	3/8	1/2	3/4	1	1-1/4	1-1/2	2	2-1/2	3
A	1.375	1.375	1.625	1.813	2.250	2.562	3.063	3.438	4.063	4.875	5.688
B	1.625	1.625	1.781	1.906	2.218	2.406	2.718	2.968	3.343	3.906	4.218
C	0.865	0.865	1.025	1.235	1.465	1.795	2.165	2.425	2.965	3.615	4.305
D	0.426	0.560	0.693	0.859	1.071	1.335	1.682	1.922	2.410	2.910	3.536
E	0.813	0.813	0.906	0.906	1.094	1.156	1.344	1.468	1.593	2.156	2.218
LBS	0.40	0.38	0.52	0.73	1.19	1.66	2.66	3.42	5.36	9.12	12.58

CLASS 6000 – FIGURE NO. 16035											
PIPE SIZE	1/8	1/4	3/8	1/2	3/4	1	1-1/4	1-1/2	2	2-1/2	3
A	1.375	1.625	1.813	2.250	2.562	3.063	3.438	4.063	4.875	5.688	---
B	1.625	1.781	1.906	2.218	2.406	2.718	2.968	3.343	3.906	4.218	---
C	0.865	1.025	1.235	1.465	1.795	2.165	2.425	2.965	3.615	4.305	---
D	0.426	0.560	0.693	0.859	1.071	1.335	1.682	1.922	2.410	2.910	---
E	0.813	0.906	0.906	1.094	1.156	1.344	1.468	1.593	2.156	2.218	---
LBS	0.48	0.56	0.75	1.35	2.01	3.17	3.92	6.60	10.12	14.00	---

ISO 9001 & PED Certified
Canadian Registered in all provinces

Threaded O-Ring Union

Specification: O-Ring groove per AS 568 B

Material: Available in a complete range of Carbon Steels, Stainless Steels, Alloy Steels and Non-ferrous metals certified to ASTM, ASME, and Military standards.

O-Ring Material: Available in Buna, Viton, or Teflon. Durometer hardness corresponds to pressure class.

Sizes: 1/8"- 3" in CL 3000 • 1/8"- 2-1/2"in CL 6000

Threads: American National Standard Taper Pipe Threads NPT (ANSI/ASME B1.20.1-1983)
Also available in other thread forms: NPTF, NPSC, NPSM, NGT, SAE, BSPT, BSPP and in any combination.
Left hand threads available upon request.

Threaded Pressure Class	Pipe Schedule
Class 3000	S160
Class 6000	XXH

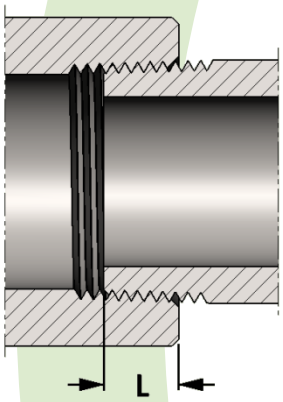

SIZE	L
1/8	0.273
1/4	0.395
3/8	0.407
1/2	0.534
3/4	0.553
1	0.661
1-1/4	0.681
1-1/2	0.681

SIZE	L
2	0.697
2-1/2	0.933
3	1.016
3-1/2	1.071
4	1.094
5	1.187
6	1.208
8	1.313

Length of thread screwed into fitting

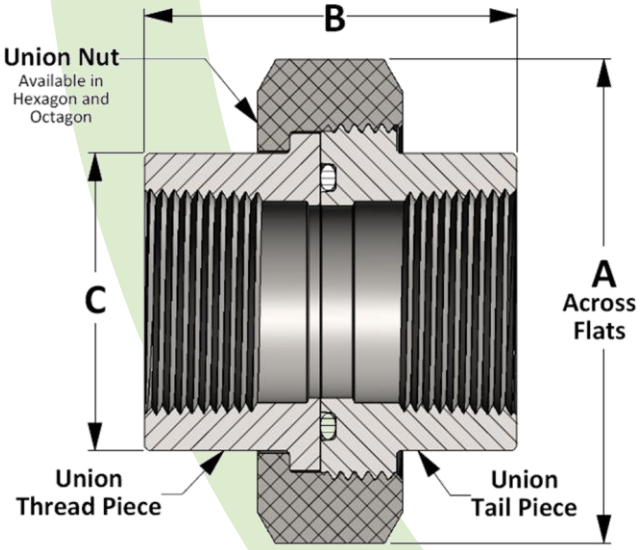

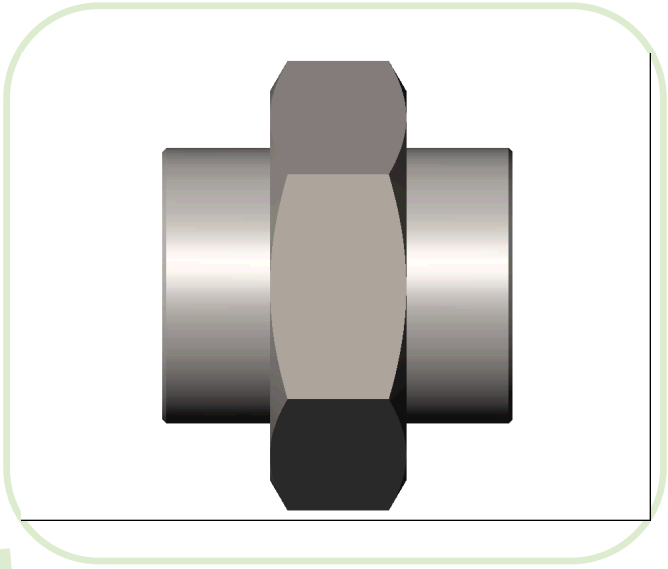

Animated Model

All dimensions are in inches • Weights are based on Carbon Steel

CLASS 3000 – Figure No. 03035											
PIPE SIZE	1/8	1/4	3/8	1/2	3/4	1	1-1/4	1-1/2	2	2-1/2	3
A	1.375	1.375	1.625	1.813	2.25	2.563	3.063	3.438	4.063	4.875	5.688
B	1.625	1.625	1.781	1.906	2.218	2.406	2.718	2.968	3.343	3.906	4.218
C	0.865	0.865	1.025	1.235	1.465	1.795	2.165	2.425	2.965	3.615	4.305
LBS	0.45	0.40	0.65	0.77	1.19	1.73	2.74	3.60	5.51	8.90	12.61

CLASS 6000 – Figure No. 06035											
PIPE SIZE	1/8	1/4	3/8	1/2	3/4	1	1-1/4	1-1/2	2	2-1/2	3
A	1.375	1.625	1.813	2.25	2.563	3.063	3.438	4.063	4.875	5.688	---
B	1.625	1.781	1.906	2.218	2.406	2.718	2.968	3.343	3.906	4.218	---
C	0.865	1.025	1.235	1.465	1.795	2.165	2.425	2.965	3.615	4.305	---
LBS	0.48	0.56	0.75	1.35	2.01	3.17	3.92	6.60	10.12	14.00	---

ISO 9001 & PED Certified
Canadian Registered in all provinces

Socket Weld Reducing Insert

Specification: MSS – SP79 except for 1/8" and all Class 9000
Socket weld ends per ASME B16.11

Material: Available in a complete range of Carbon Steels, Stainless Steels, Alloy Steels and Non-ferrous metals certified to ASTM, ASME, and Military standards.

Sizes: 1/8"- 4" in CL 3000, CL 6000 and CL 9000
Also available in tube sizes and special pipe schedules/class rating.

Socket Weld Pressure Class	Pipe Schedule
Class 3000	S80/XH
Class 6000	S160
Class 9000	XXH

Type 1

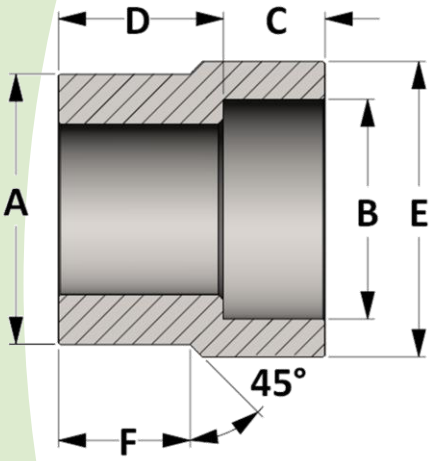

Type 2

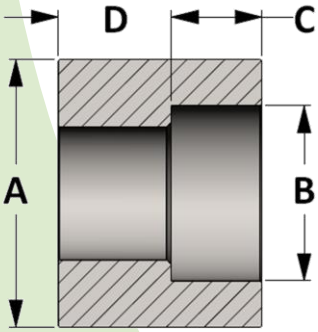

Active 3D Model

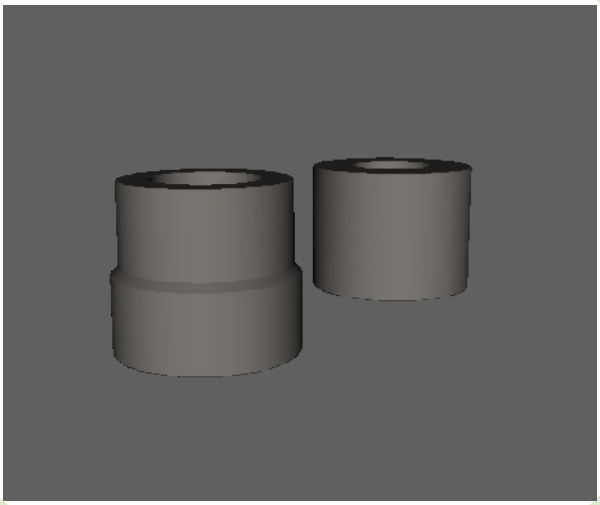

All dimensions are in inches

Pipe Size		CLASS 3000 – Figure No. 13016						
		TYPE	A	B	C	D	E	F
1/4	1/8	1	0.540	0.426	0.438	0.750	0.750	0.563
3/8	1/8	1	0.675	0.426	0.438	0.750	0.750	0.563
	1/4	1	0.675	0.560	0.438	0.750	0.875	0.563
1/2	1/8	2	0.840	0.426	0.438	0.813	---	---
	1/4	1	0.840	0.560	0.438	0.813	0.875	0.625
	3/8	1	0.840	0.693	0.438	0.813	1.063	0.625
3/4	1/8	2	1.050	0.426	0.438	0.688	---	---
	1/4	2	1.050	0.560	0.438	0.688	---	---
	3/8	2	1.050	0.693	0.438	0.625	---	---
	1/2	1	1.050	0.859	0.500	0.875	1.250	0.688
1	1/4	2	1.315	0.560	0.438	0.750	---	---
	3/8	2	1.315	0.693	0.438	0.688	---	---
	1/2	2	1.315	0.859	0.500	0.625	---	---
	3/4	1	1.315	1.071	0.563	0.938	1.500	0.750
1-1/4	3/8	2	1.660	0.693	0.438	0.813	---	---
	1/2	2	1.660	0.859	0.500	0.750	---	---
	3/4	2	1.660	1.071	0.563	0.688	---	---
	1	1	1.660	1.335	0.625	1.000	1.813	0.813
1-1/2	3/8	2	1.900	0.693	0.438	0.880	---	---
	1/2	2	1.900	0.859	0.500	0.813	---	---
	3/4	2	1.900	1.071	0.563	0.750	---	---
	1	2	1.900	1.335	0.625	0.688	---	---
	1-1/4	1	1.900	1.682	0.688	1.125	2.250	0.875

Pipe Size		CLASS 3000 – Figure No. 13016						
		TYPE	A	B	C	D	E	F
2	1/2	2	2.375	0.859	0.500	1.000	---	---
	3/4	2	2.375	1.071	0.563	0.938	---	---
	1	2	2.375	1.335	0.625	0.875	---	---
	1-1/4	2	2.375	1.682	0.688	0.813	---	---
	1-1/2	1	2.375	1.922	0.750	1.250	2.500	1.000
2-1/2	3/4	2	2.875	1.071	0.563	1.563	---	---
	1	2	2.875	1.335	0.625	1.500	---	---
	1-1/4	2	2.875	1.682	0.688	1.438	---	---
	1-1/2	2	2.875	1.922	0.750	1.375	---	---
	2	1	2.875	2.410	0.875	1.813	3.000	1.500
3	3/4	2	3.500	1.071	0.563	1.312	---	---
	1	2	3.500	1.335	0.625	1.250	---	---
	1-1/4	2	3.500	1.682	0.688	1.188	---	---
	1-1/2	2	3.500	1.922	0.750	1.125	---	---
	2	2	3.500	2.410	0.875	1.000	---	---
	2-1/2	1	3.500	2.910	0.875	1.500	3.625	1.250
4	3/4	2	4.500	1.071	0.563	1.813	---	---
	1	2	4.500	1.335	0.625	1.750	---	---
	1-1/4	2	4.500	1.682	0.688	1.688	---	---
	1-1/2	2	4.500	1.922	0.750	1.625	---	---
	2	2	4.500	2.410	0.875	1.500	---	---
	2-1/2	2	4.500	2.910	0.875	1.500	---	---
	3	2	4.500	3.536	1.063	1.313	---	---

ISO 9001:2008 & PED Certified
Canadian Registered in all provinces

Socket Weld Reducing Insert Contd.

Pipe Size		CLASS 6000 – Figure No. 16016						
		TYPE	A	B	C	D	E	F
1/4	1/8	1	0.540	0.426	0.438	0.813	0.875	0.625
3/8	1/8	1	0.675	0.426	0.438	0.813	1.063	0.625
	1/4	1	0.675	0.560	0.438	0.813	0.875	0.625
1/2	1/8	1	0.840	0.426	0.438	0.813	0.875	0.625
	1/4	1	0.840	0.560	0.438	0.813	1.000	0.625
	3/8	1	0.840	0.693	0.438	0.875	1.313	0.625
3/4	1/8	2	1.050	0.426	0.438	0.875	---	---
	1/4	2	1.050	0.560	0.438	0.875	---	---
	3/8	1	1.050	0.693	0.438	0.875	1.313	0.750
	1/2	1	1.050	0.859	0.500	1.000	1.500	0.750
1	1/4	2	1.315	0.560	0.438	0.938	---	---
	3/8	2	1.315	0.693	0.438	0.875	---	---
	1/2	1	1.315	0.859	0.500	1.125	1.500	0.813
	3/4	1	1.315	1.071	0.563	1.125	1.750	0.813
1-1/4	3/8	2	1.660	0.693	0.438	0.940	---	---
	1/2	2	1.660	0.859	0.500	0.875	---	---
	3/4	2	1.660	1.071	0.563	0.813	---	---
	1	1	1.660	1.335	0.625	1.188	2.250	0.875
1-1/2	3/8	2	1.900	0.693	0.438	1.125	---	---
	1/2	2	1.900	0.859	0.500	1.063	---	---
	3/4	2	1.900	1.071	0.563	1.000	---	---
	1	1	1.900	1.335	0.625	1.156	2.250	1.000
	1-1/4	1	1.900	1.682	0.688	1.375	2.500	1.000

Pipe Size		CLASS 6000 – Figure No. 16016						
		TYPE	A	B	C	D	E	F
2	1/2	2	2.375	0.859	0.500	1.125	---	---
	3/4	2	2.375	1.071	0.563	1.063	---	---
	1	2	2.375	1.335	0.625	1.000	---	---
	1-1/4	2	2.375	1.682	0.688	0.938	---	---
	1-1/2	1	2.375	1.922	0.750	1.531	3.000	1.125
2-1/2	3/4	2	2.875	1.071	0.563	1.500	---	---
	1	2	2.875	1.335	0.625	1.500	---	---
	1-1/4	2	2.875	1.682	0.688	1.438	---	---
	1-1/2	2	2.875	1.922	0.750	1.375	---	---
	2	1	2.875	2.410	0.875	1.688	3.625	1.250
3	3/4	2	3.500	1.071	0.563	1.688	---	---
	1	2	3.500	1.335	0.625	1.625	---	---
	1-1/4	2	3.500	1.682	0.688	1.250	---	---
	1-1/2	2	3.500	1.922	0.750	1.250	---	---
	2	2	3.500	2.410	0.875	1.250	---	---
	2-1/2	1	3.500	2.910	0.875	2.250	4.250	1.750
4	3/4	2	4.500	1.071	0.563	2.312	---	---
	1	2	4.500	1.335	0.625	2.250	---	---
	1-1/4	2	4.500	1.682	0.688	2.188	---	---
	1-1/2	2	4.500	1.922	0.750	2.125	---	---
	2	2	4.500	2.410	0.875	2.000	---	---
	2-1/2	2	4.500	2.910	0.875	2.000	---	---
	3	1	4.500	3.536	1.000	2.563	4.750	1.750

Pipe Size		CLASS 9000 – Figure No. 19016						
		TYPE	A	B	C	D	E	F
1/4	1/8	1	0.540	0.426	0.438	0.875	1.000	0.500
3/8	1/8	1	0.675	0.426	0.438	0.875	1.000	0.563
	1/4	1	0.675	0.560	0.438	1.000	1.250	0.563
1/2	1/8	1	0.840	0.426	0.438	0.875	1.000	0.625
	1/4	1	0.840	0.560	0.438	1.000	1.250	0.625
	3/8	1	0.840	0.693	0.438	1.125	1.500	0.625
3/4	1/8	2	1.050	0.426	0.438	1.250	---	---
	1/4	1	1.050	0.560	0.438	1.000	1.250	0.688
	3/8	1	1.050	0.693	0.438	1.063	1.500	0.688
	1/2	1	1.050	0.859	0.500	1.188	1.750	0.688
1	1/4	2	1.315	0.560	0.438	1.375	---	---
	3/8	1	1.315	0.693	0.438	1.000	1.500	0.750
	1/2	1	1.315	0.859	0.500	1.188	1.750	0.750
	3/4	1	1.315	1.071	0.563	1.313	2.250	0.750
1-1/4	3/8	2	1.660	0.693	0.438	1.375	---	---
	1/2	2	1.660	0.859	0.500	1.313	---	---
	3/4	1	1.660	1.071	0.563	1.188	2.250	0.813
	1	1	1.660	1.335	0.625	1.375	2.500	0.813
1-1/2	3/8	2	1.900	0.693	0.438	1.500	---	---
	1/2	2	1.900	0.859	0.500	1.438	---	---
	3/4	2	1.900	1.071	0.563	1.375	---	---
	1	1	1.900	1.335	0.625	1.313	2.500	0.875
	1-1/4	1	1.900	1.682	0.688	1.625	3.000	0.875

Pipe Size		CLASS 9000 – Figure No. 19016						
		TYPE	A	B	C	D	E	F
2	1/2	2	2.375	0.859	0.500	1.563	---	---
	3/4	2	2.375	1.071	0.563	1.500	---	---
	1	2	2.375	1.335	0.625	1.438	---	---
	1-1/4	1	2.375	1.682	0.688	1.500	3.000	1.000
	1-1/2	1	2.375	1.922	0.750	1.625	3.625	1.000
2-1/2	3/4	2	2.875	1.071	0.563	1.750	---	---
	1	2	2.875	1.335	0.625	1.688	---	---
	1-1/4	2	2.875	1.682	0.688	1.625	---	---
	1-1/2	1	2.875	1.922	0.750	1.438	3.625	1.063
	2	1	2.875	2.410	0.875	1.750	4.250	1.063
3	3/4	2	3.500	1.071	0.563	1.875	---	---
	1	2	3.500	1.335	0.625	1.813	---	---
	1-1/4	2	3.500	1.682	0.688	1.750	---	---
	1-1/2	2	3.500	1.922	0.750	1.688	---	---
	2	1	3.500	2.410	0.875	1.500	4.250	1.125
	2-1/2	1	3.500	2.910	0.938	1.938	5.000	1.125
4	3/4	2	4.500	1.071	0.563	2.063	---	---
	1	2	4.500	1.335	0.625	2.000	---	---
	1-1/4	2	4.500	1.682	0.688	1.938	---	---
	1-1/2	2	4.500	1.922	0.750	1.875	---	---
	2	2	4.500	2.410	0.875	1.750	---	---
	2-1/2	2	4.500	2.910	0.938	1.688	---	---
	3	1	4.500	3.536	1.000	2.000	5.500	1.250